STARTER RACK

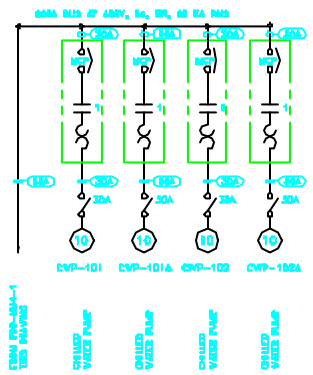

LP-NM4-1 — 22,000 AIC

SERVICE: 277/480V, 3ø, 4W
MAINS:
CONN. WATTS: PHASE A: PHASE B: PHASE C:
MOUNTING: SURFACE
TOTAL WATTS:

S/N	PHASE A	PHASE B	PHASE C	TRIP CAP.	CCT No.		CCT No.	TRIP CAP.	PHASE A	PHASE B	PHASE C	GROUND
DEDAY AREA	3000			20	1		2	20	1060			ELECTRONIC ROOM
EXPERIMENTAL HALL L.L.		2800		20	3		4	20		1140		COMPUTER AREA
EXPERIMENTAL HALL L.L.			2440	20	5		6	20			720	BUILDING SERVICES
EXPERIMENTAL HALL L.L.	2880			20	7		8	20	–			SPARE
SPARE		–		20	9		10	20		–		SPARE
EXP. HALL (LVD. ROOM			420	20	11		12	20			–	SPARE
EXPERIMENTAL HALL G.L.	3600			20	13		14	20	–			SPARE
EXPERIMENTAL HALL G.L.		3600		20	15		16	20		–		SPARE
EXPERIMENTAL HALL G.L.			3600	20	17		18	20			–	SPARE
EXPERIMENTAL HALL G.L.	3600			20	19		20	20	–			SPARE
SPARE		–		20	21		22	20		–		SPARE
SPARE			–	20	23		24	20			1880	OUTDOOR LIGHTING
SPARE	–			20	25		26		–			RECEPTACLE PNL RP-NM4-1
SPARE		–		20	27		28	70		–		RECEPTACLE PNL RP-NM4-1
SPARE			–	20	29		30				–	RECEPTACLE PNL RP-NM4-1
SPACE					31		32					SPACE
SPACE					33		34					SPACE
SPACE					35		36					SPACE
SPACE					37		38					SPACE
SPACE					39		40					SPACE
SPACE					41		42					SPACE

MLO 225A

WIRE AND CONDUIT SCHEDULE

TAG	No. AND WIRE SIZE	CONDUIT SIZE	PHASE A	PHASE B	PHASE C	NEUTRAL	GROUND
[illegible]	[illegible]	[illegible]	[illegible]	[illegible]	[illegible]	[illegible]	[illegible]

TRANSFORMER SCHEDULE

TAG	PRIMARY	SECONDARY	PHASE	KVA	PANEL	FEEDER
[illegible]	[illegible]	[illegible]	[illegible]	[illegible]	[illegible]	[illegible]

ABOVE SCHEDULED TRANSFORMERS ARE FED FROM LP OR PHP AND ARE NOT SHOWN ON SINGLE LINE DIAGRAM, DWG. E-2.

DHP-NM4-1

SERVICE: 480 3ø, 4W
CONNECTED WATTS:
BRANCH: BOLT-ON
MOUNTING: SURFACE
FEEDER: SEE DWG. E-2
INTERRUPT RATING: 25,000 AIC

S/N	LOAD	TRIP CAP.	CCT No.		CCT No.	TRIP CAP.	LOAD	GROUND
AHU-101	7.3HP	100/30	1		2	100/30	15KW	EUH-101
EUH-101	15KW	100/30	3		4	100/20	4.4 & 4KW	EUH-101A, 101B
CAC-101	15.8A	100/30	5		6	100/30	15.8A	CAC-101
CAC-102	15.8A	100/30	7		8	100/20	.5KW	EUH-100
OVERHEAD CRANE	2HP	100/30	9		10	100/20	2A	STM-100
STARTER RACK	–	100/30	11		12	100/20	.5KW	EUH-200
SPARE	–	100/30	13		14	100/20	–	SPARE
			15		16			
			17		18			
			19		20			

N.L.D. 600A

PHP-NM4-1

SERVICE: 480/277V, 3ø, 4W
CONNECTED WATTS:
BRANCH: BOLT-ON
MOUNTING: SURFACE
FEEDER: SEE DWG. E-2
INTERRUPT RATING: 25,000 AIC

S/N	LOAD	TRIP CAP.	CCT No.		CCT No.	TRIP CAP.	LOAD	GROUND
[illegible] & RP-3	2@ 2HP & 2@ 1/2HP	100/20	1		2	225/225	–	PDP-NM4-3
WELDING RECEPTACLES WR-1, WR-2, WR-3	60A	100/60	3		4	100/60	60A	WELDING RECEPTACLES WR-3, WR-4, WR-5
[illegible]	5KW	100/20	5		6	100/20	5KW	EUH-100C
PP-NM4-2	30KVA	100/50	7		8	100/20	5KW	EUH-100D
SPARE	–	100/20	9		10	100/20	5KW	EUH-100E
SPACE	–	100	11		12	100	–	SPACE
SPACE	–	100	13		14	100	–	SPACE
			15		16			
			17		18			
			19		20			

400A

PHP-NM4-2

SERVICE: 480/277V, 3ø, 4W
CONNECTED WATTS:
BRANCH: BOLT-ON
MOUNTING: SURFACE
FEEDER: SEE DWG. E-2
INTERRUPT RATING: 25,000 AIC

S/N	LOAD	TRIP CAP.	CCT No.		CCT No.	TRIP CAP.	LOAD	GROUND
EUH-100	–	100/20	1		2	100/30	30KVA	PP-NM4-1
EUH-100A	–	100/20	3		4	100/60	60A	WR-6, WR-7, WR-8
EUH-100B	–	100/20	5		6	100/20	5KW	EUH-202
SPARE	–	100/20	7		8	100/60	–	SPARE
SPACE	–	100	9		10	100	–	SPACE
SPACE	–	100	11		12	100	–	SPACE
SPACE	–	100	13		14	100	–	SPACE
			15		16			
			17		18			
			19		20			

MLO 225A

No.	Date	Drawing Issue Description	By
3	9/30/94	SEPARATED CCT'S. FOR SUMP PUMPS & ELEC. HTR.	

KNIGHT
Knight Architects Engineers Planners, Inc.
140 West Randolph Street
Chicago IL 60601

	NAME	DATE
CHECKPOINT REVIEW	D. VALDES	1/28/94
CRITERIA REVIEW	J. TITUS S. DIXON	1/28/94
CAP APPROVAL	E. CRUMPLEY	1/28/94
FESS APPROVAL	W. NESTANDER	1/28/94
SUBMITTED	C. BOCK	1/28/94

SCALE:

FERMI NATIONAL ACCELERATOR LABORATORY
UNITED STATES DEPARTMENT OF ENERGY

KTeV EXPERIMENTAL AREA
POWER PANEL SCHEDULES – SHT. 1

DRAWING No. 8-6-3 E-10 REV. B

DO NOT SCALE DRAWING

DGN\ETime 10/14/94 16:11:12 User: KW Filename: P:\PAREN\KEPS8C10