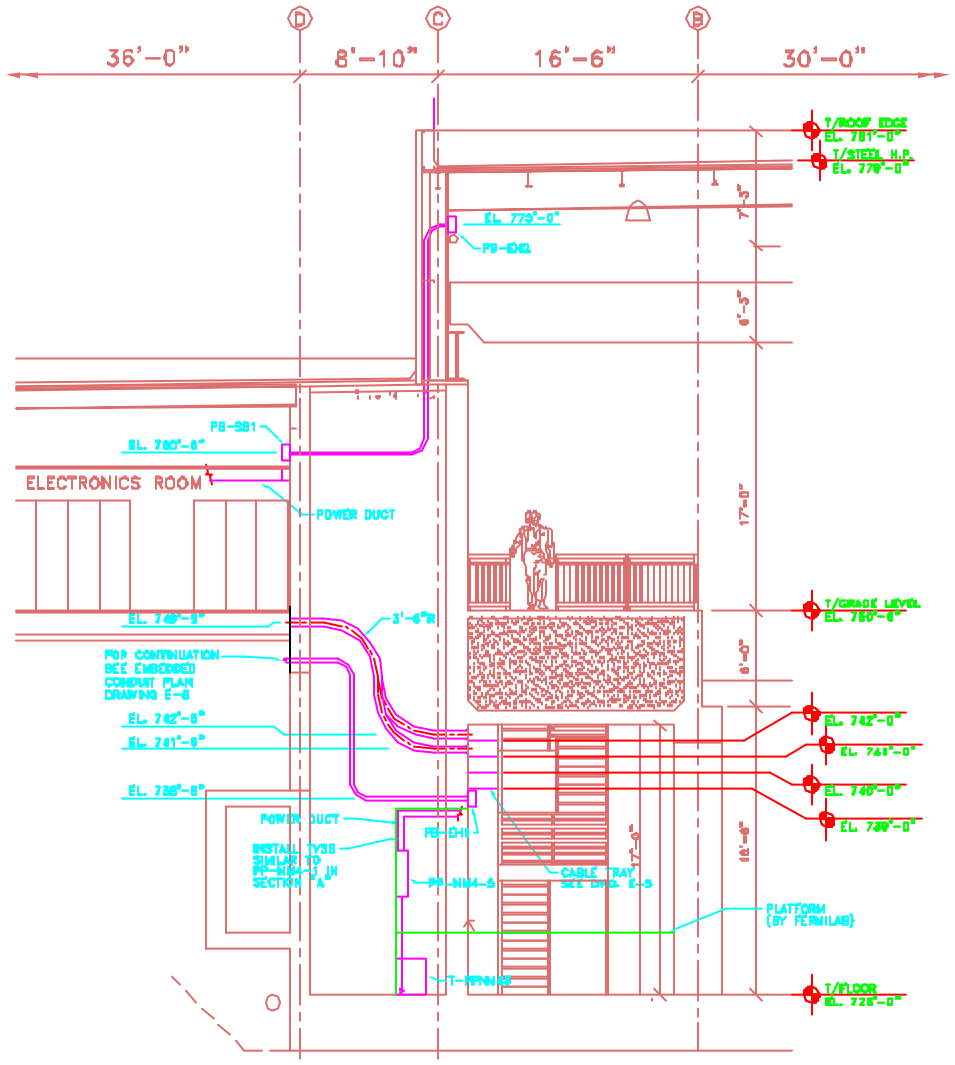

SECTION B 1/4"=1'-0" E-5,6

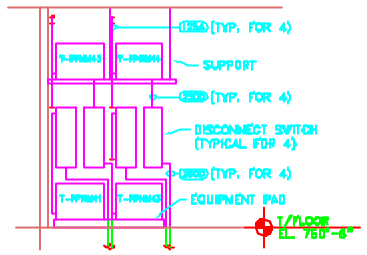

SECTION C 1/4"=1'-0" E-6

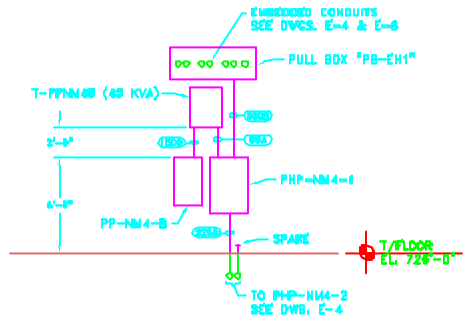

DETAIL 1 1/4"=1'-0" E-5

FOR ADDITIONAL CONNECTIONS, SEE PLAN.

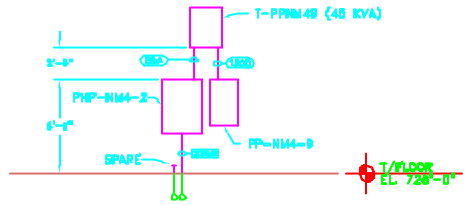

DETAIL 2 1/4"=1'-0" E-5

FOR ADDITIONAL CONNECTIONS, SEE PLAN.

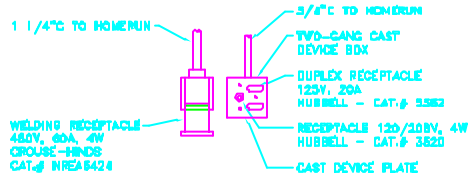

DETAIL 3 N.T.S. E-5

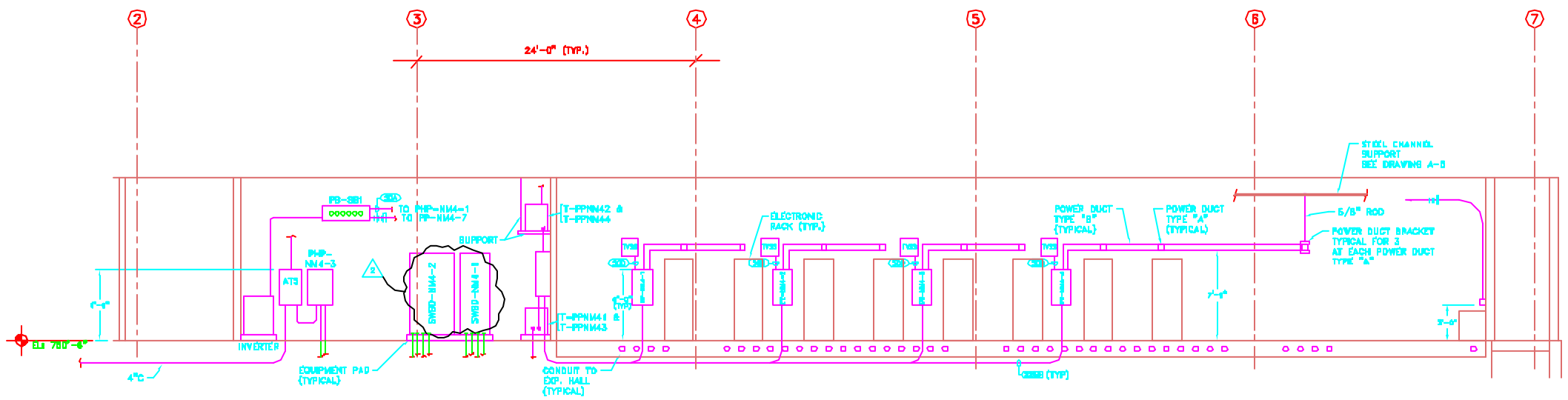

SECTION A 1/4"=1'-0" E-5,6

NOTE:

1.) FOR SYMBOL LIST, SEE DRAWING E-1.

No.	Date	Drawing Issue Description	By
2	7/19/94	REVISED EQUIPMENT NAMES	

KNIGHT

Knight Architects Engineers Planners, Inc.
540 West Randolph Street
Chicago IL 60661

	NAME	DATE
DISCIPLINE REVIEW	D. VALDES	1/28/94
CRITERIA REVIEW	J. TITUS S. DIXON	1/28/94
E&P APPROVAL	E. CRUMPLEY	1/28/94
FERMI APPROVAL	W. NESTANDER	1/28/94
SUBMITTED	C. BOCK	1/28/94

SCALE: 1/4"=1'-0" 0 4 8 SCALE FEET

FERMI NATIONAL ACCELERATOR LABORATORY
UNITED STATES DEPARTMENT OF ENERGY

KTeV EXPERIMENTAL AREA
ELECTRICAL SECTIONS & DETAILS

DRAWING NO. 8-6-3 E-13 REV. 2

13 JULY 1994

DGNFILENAME 01/28/94 12:18:48 User: BCS Filename: P:\KEXP-TOAFB\KCES3016