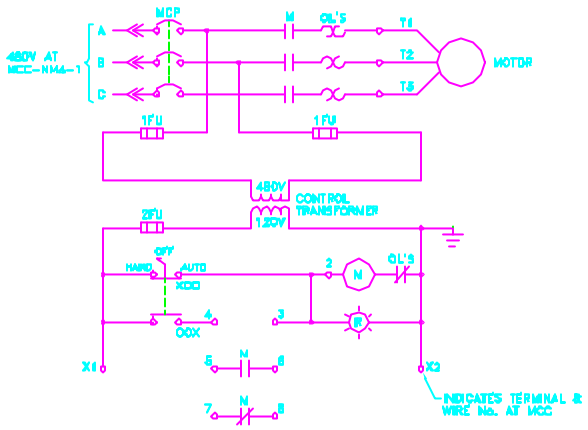

TYPICAL FVNR STARTER SCHEMATIC

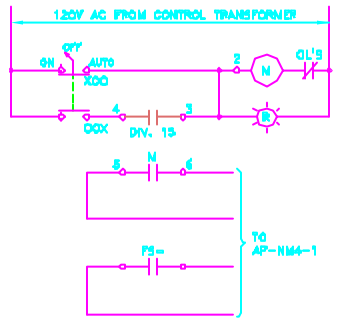

SCHEMATIC DIAGRAM

TYPICAL FOR DEVICES LISTED BELOW

CWP-101/FS-101	CHILLED WATER PUMP
CWP-101A/FS-101A	CHILLED WATER PUMP
CWP-102/FS-102	CHILLED WATER PUMP
CWP-102A/FS-102A	CHILLED WATER PUMP

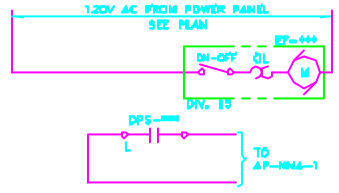

SCHEMATIC DIAGRAM

TYPICAL FOR DEVICES LISTED BELOW

EF-101/DPS-101	NM-3A EXHAUST FAN
EF-102/DPS-102	NM-3A EXHAUST FAN
EF-103/DPS-103	NM-3A EXHAUST FAN
EF-106/DPS-106	ETAIR #3 EXHAUST FAN

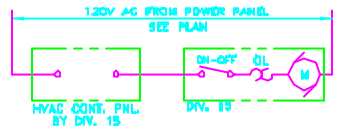

SF-101 SCHEMATIC DIAGRAM

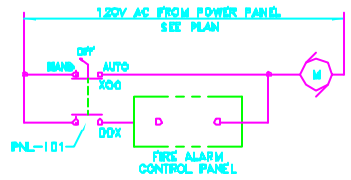

SMOKE DAMPER DIAGRAM

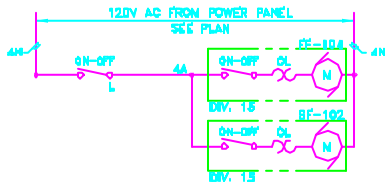

EF-104/SF-102 SCHEMATIC DIAGRAM

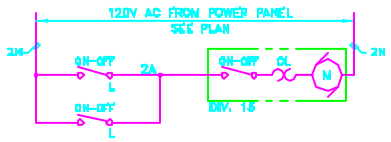

EF-105 SCHEMATIC DIAGRAM

No.	Date	Drawing Issue Description	By

KNIGHT

Knight Architects Engineers Planners, Inc.
540 West Randolph Street
Chicago, IL 60661

	NAME	DATE
DESIGNER REVIEW	D. VALDES	1/28/94
CONTROLS REVIEW	J. TITUS S. DIXON	1/28/94
E&P APPROVAL	E. CRUMPLEY	1/28/94
FESHM APPROVAL	W. NESTANDER	1/28/94
SUBMITTED	C. BOCK	1/28/94

SCALE:

FERMI NATIONAL ACCELERATOR LABORATORY
UNITED STATES DEPARTMENT OF ENERGY

KTeV EXPERIMENTAL AREA
ELECTRICAL SCHEMATIC DIAGRAMS

DRAWING No. 8-6-3 E-14 REV.

DOE/ER/40561-1994