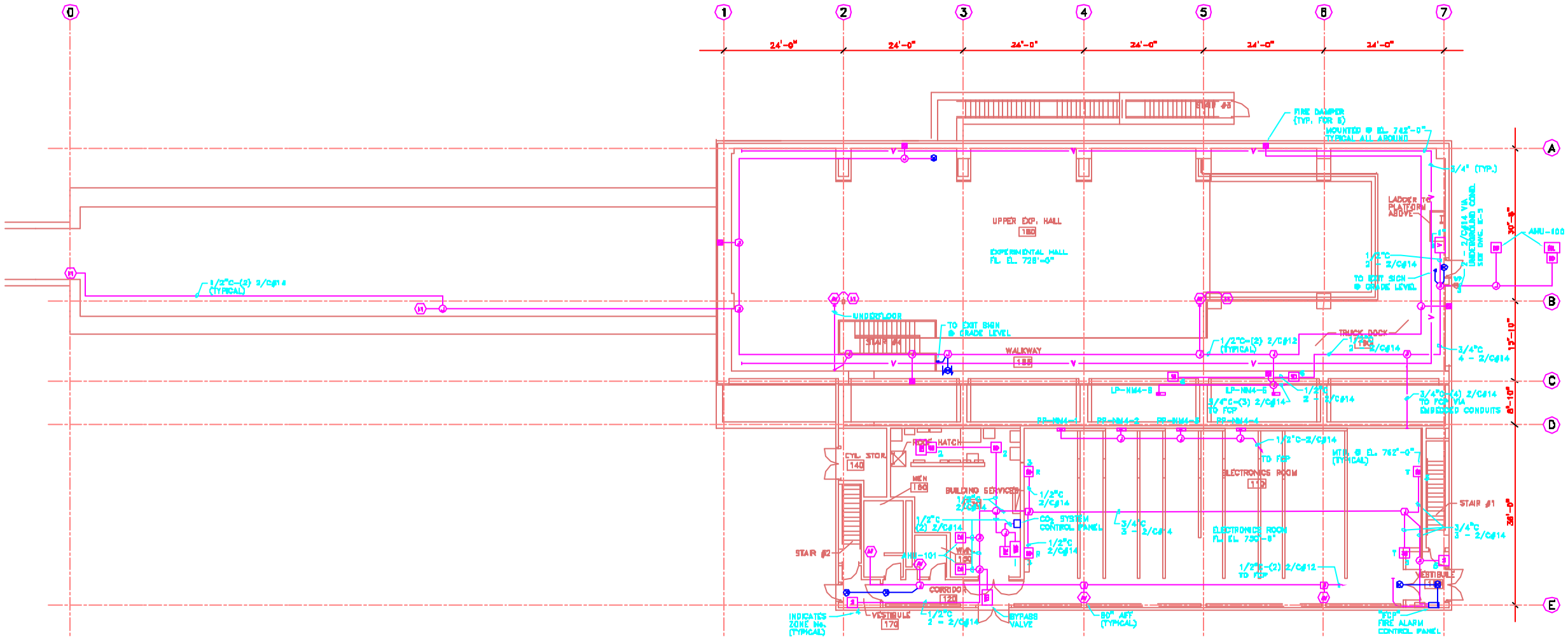

SPECIAL SYSTEMS PLAN

1/8"=1'-0"

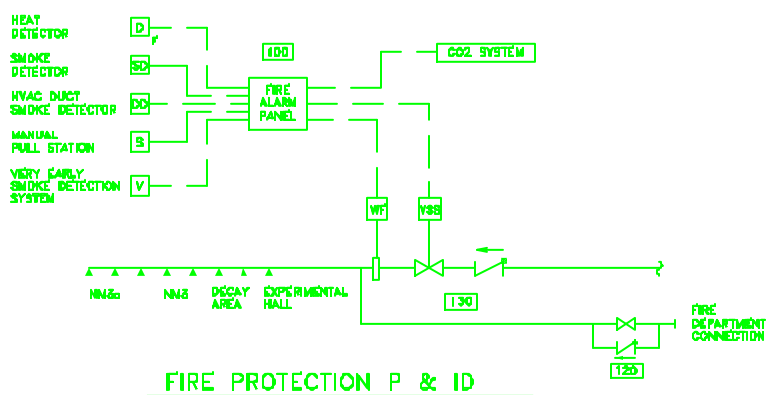

FIRE PROTECTION P & ID

NOTE:

1.) FOR SYMBOL LIST, SEE DRAWING E-1.

No.	Date	Drawing Issue Description	By

KNIGHT

Knight Architects Engineers Planners, Inc.
340 West Randolph Street
Chicago, IL 60601

	NAME	DATE
DISCIPLINE REVIEW	D. VALDES	1/28/94
SYSTEMS REVIEW	J. TITUS S. DIXON	1/28/94
E&P APPROVAL	E. CRUMPLEY	1/28/94
FESHM APPROVAL	W. NESTANDER	1/28/94
SUBMITTED	G. BOCK	1/28/94

PROJECT NORTH

SCALE:

FERMI NATIONAL ACCELERATOR LABORATORY
UNITED STATES DEPARTMENT OF ENERGY

KTeV EXPERIMENTAL AREA
SPECIAL SYSTEMS

DRAWING NO. 8-6-3 E-12 REV.

28 JAN 1994

DGN:ETIME 01/25/94 13:02:06 User: BKS Filename: P:\SEED-TOLER\VERS512