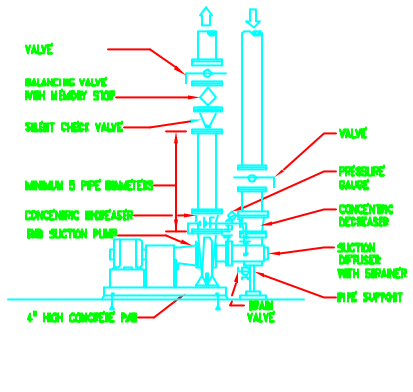

PUMP/PIPING (1)
SCALE = NONE

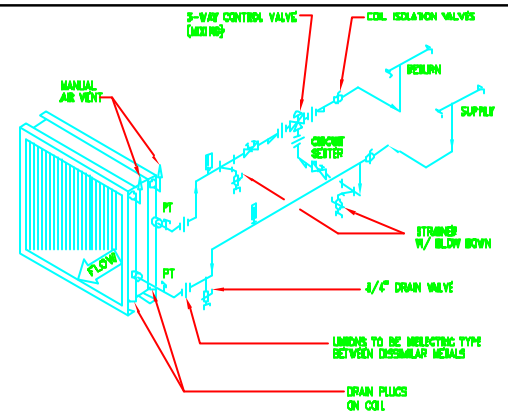

NOTES
1. PROVIDE CLEARANCE OF PIPES FOR COIL REMOVAL.
2. SEE FLOOR PLAN FOR PIPE SIZES.
3. UNION OR FLANGE CONNECTION ON EACH SIDE OF CONTROL VALVE.
4. PROVIDE CLEARANCE OF PIPES FOR ALL CABINET ACCESS PANELS.

CHW COIL PIPING (2)
SCALE = NONE

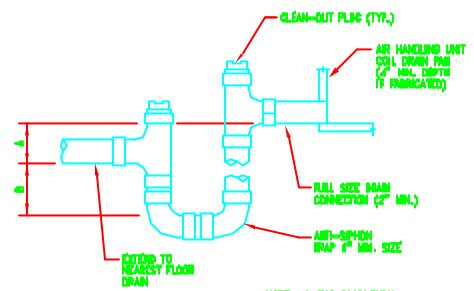

NOTE: 1. FOR BLOW THRU
A = 2" MIN.
B = FAN DISCHARGE S.P. + 1"

2. FOR DRAIN THRU
A = 4" MIN.
B = FAN SUCTION S.P. + 1"

COIL DRAIN TRAP (3)
SCALE = NONE

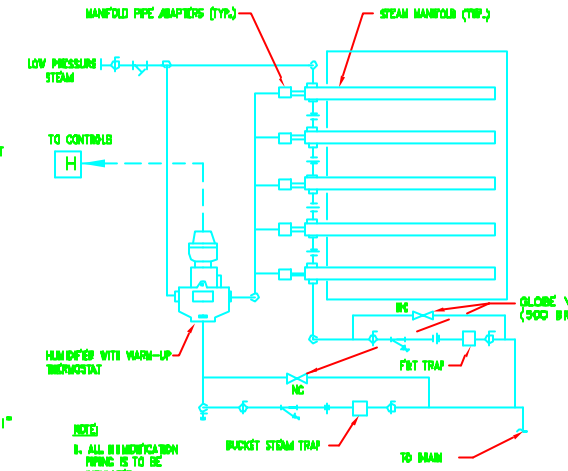

NOTE:
1. ALL REMOVEABLE PIPING IS TO BE INSULATED.
2. WARM-UP THERMOSTAT IS TO BE PROVIDED TO PREVENT SPITTING.

MANIFOLD HUMIDIFIER (4)
SCALE = NONE

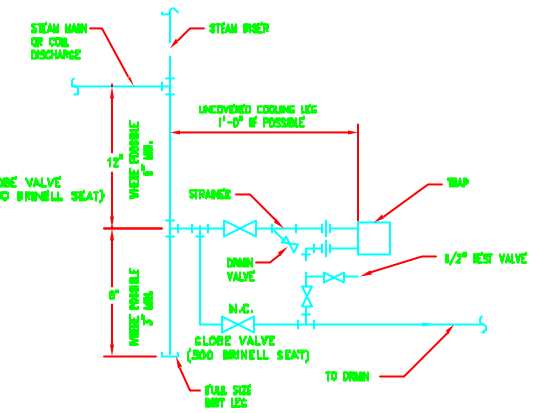

LP STEAM TRAP (5)
SCALE = NONE

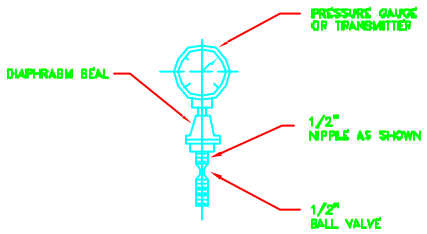

DIAPHRAGM SEAL

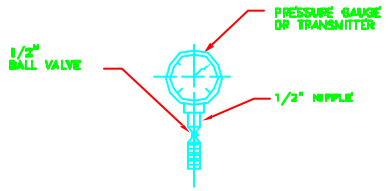

STANDARD

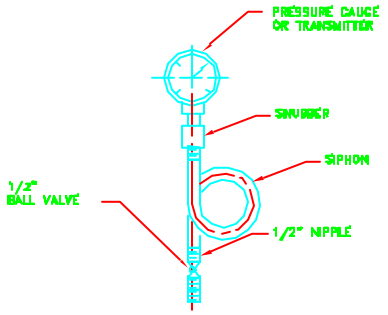

STEAM

NOTES:
1. PRESSURE CONNECTIONS FOR 2" AND LARGER USE 1/2" NIPOLET, 1 1/2" AND SMALLER USE A TEE FITTING @ PIPE SIZE, REDUCE TO 1/2" AND PROVIDE 1/2" (TBE) NIPPLE.

PRESSURE (6)
SCALE = NONE

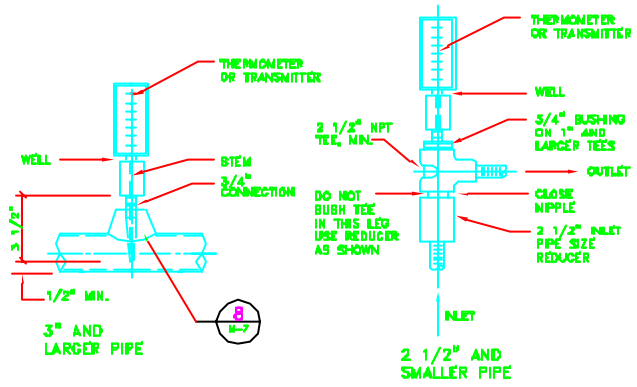

NOTES:
1. FOR STEEL AND STAINLESS STEEL 3" AND LARGER USE 3/4" THRED-O-LET AS SHOWN.
2. FOR PLASTIC PIPE 3" AND LARGER USE A FULL SIZE TEE AND BUSH THE BRANCH DOWN TO A 3/4" NPT CONNECTION.
3. FOR ALL PIPING MATERIALS 2 1/2" AND SMALLER USE 2 1/2" AS SHOWN ABOVE.
4. PROVIDE THERMOMETER OR TEMP. TRANSMITTER AS SPECIFIED .
5. PROVIDE THERMOWELL FOR BIMETALLIC THERMOMETERS AND WITH 3" LONG EXT.

THERMOMETER (7)
SCALE = NONE

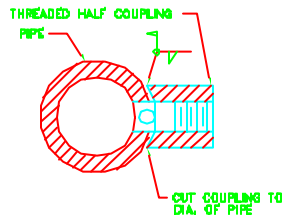

NOTE:
THIS NIPPLE IS DESIGN TO BE USE IN LIEU OF A THRED-O-LET.

SHAPED NIPPLE (8)
SCALE = NONE

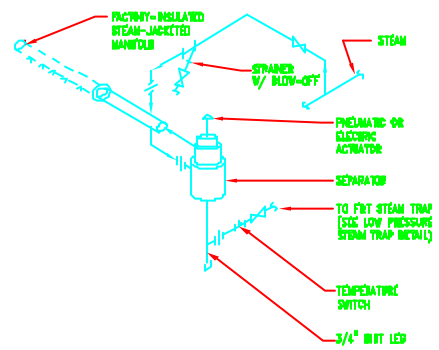

AHU 101

GRID HUMIDIFIER (9)
SCALE = NONE

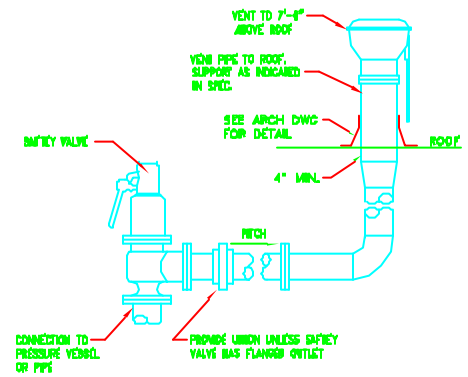

NOTES:
1. UNLESS OTHERWISE SHOWN ON THE DWGS. SIZE THE VENT PIPE SO THAT THE VELOCITY PRESSURE AT SAFETY VALVE OUTLET IS GREATER THAN STATIC PRESSURE AT LOWER END OF VENT PIPE.
2. SEE ELECTRICAL DWG FOR LIGHTING PROTECTION.

S.R.V. EXHAUST (10)
SCALE = NONE

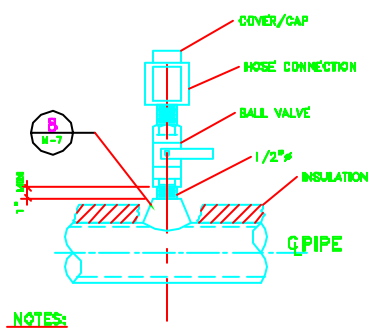

NOTES:
1. FOR STEEL AND S.S. CONNECTIONS 2" AND LARGER USE 1/2" THRED-O-LET, 1 1/2" AND SMALLER USE A TEE FITTING @ PIPE SIZE, REDUCE TO 3/4"#

BLEED VALVE (11)
SCALE = NONE

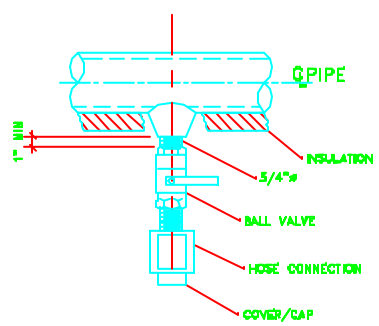

NOTES:
1. FOR STEEL AND S.S. CONNECTIONS 2" AND LARGER USE 1/2" THRED-O-LET, 1 1/2" AND SMALLER USE A TEE FITTING @ PIPE SIZE, REDUCE TO 3/4"#

DRAIN VALVE (12)
SCALE = NONE

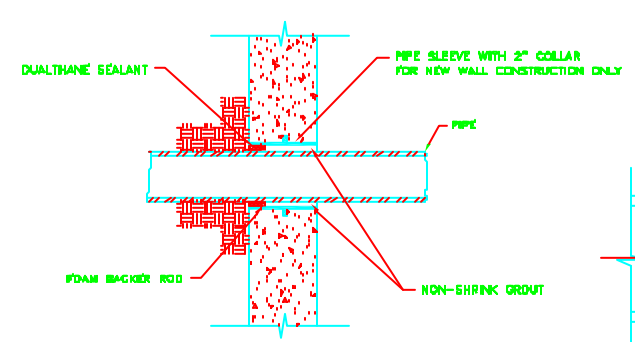

UNDERGROUND PIPE SLEEVE (15)
SCALE = NONE

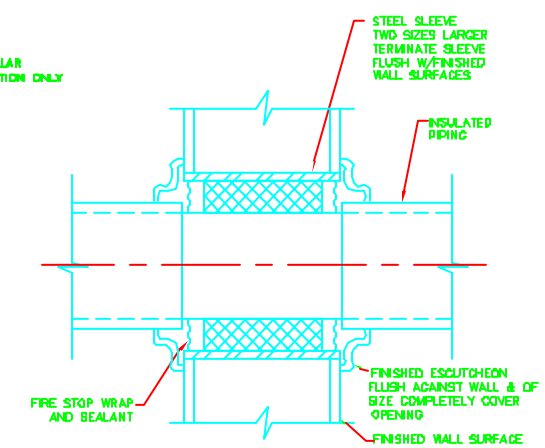

FIRE RETARDANT PENETRATION (16)
SCALE = NONE

No.	Date	Drawing Issue Description	By

KNIGHT
Knight Architects Engineers Planners, Inc.
540 West Randolph Street
Chicago, IL 60661

	NAME	DATE
DISCIPLINE REVIEW	S. KRSTULOVICH	1/28/94
SENIOR REVIEW	J. TITUS S. DIXON	1/28/94
CAD APPROVAL	E. CRUMPLEY	1/28/94
PROJ APPROVAL	W. NESTANDER	1/28/94
SUBMITTED	G. BOCK	1/28/94

SCALE: NONE

FERMI NATIONAL ACCELERATOR LABORATORY
UNITED STATES DEPARTMENT OF ENERGY

KTeV EXPERIMENTAL AREA
DETAILS

DRAWING NO. 8-6-3 M-7 REV.

28 JAN. 1994

DateTime 01/28/94 10:18:08 User BIS Filename: D:\USERD-TOAER\CAPEM-07