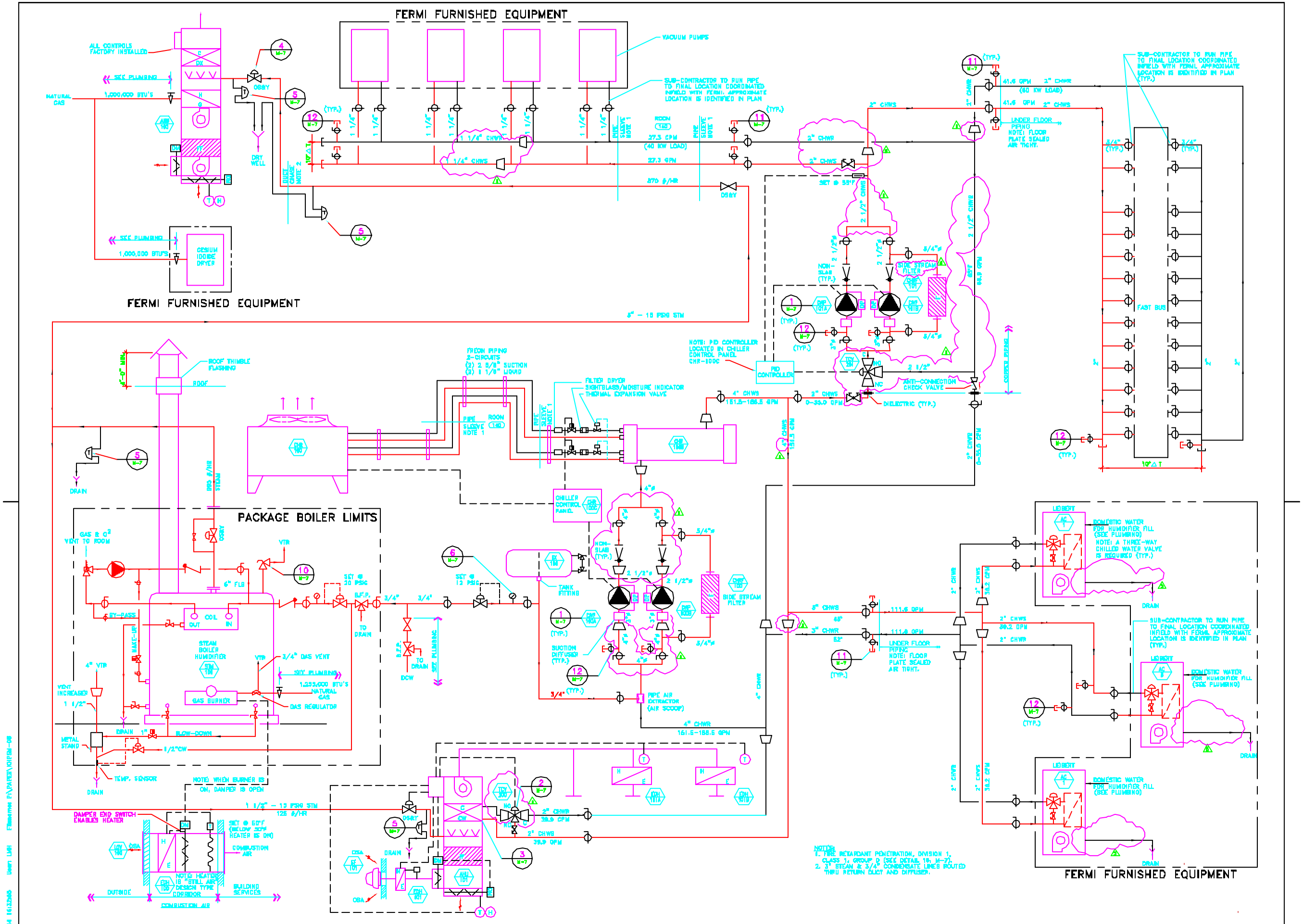

KNIGHT

Knight Architects Engineers Planners, Inc.
340 West Randolph Street
Chicago, IL 60601

	NAME	DATE
GROUPWIRE REVIEW	S. KRSTULOVICH	1/28/94
CRITERIA REVIEW	J. TITUS S. DIXON	1/28/94
CAP APPROVAL	E. CRUMPLEY	1/28/94
FESS APPROVAL	W. NESTANDER	1/28/94
SUBMITTED	C. BOCK	1/28/94

SCALE: NONE

FERMI NATIONAL ACCELERATOR LABORATORY
UNITED STATES DEPARTMENT OF ENERGY

KTeV EXPERIMENTAL AREA
FLOW DIAGRAM

DRAWING NO. 8-6-3 M-8 REV. 5

No.	Date	Drawing Issue Description	By
5	9/30/94	REVISE PIPING AND REMOVED CONDENSATE PUMPS	