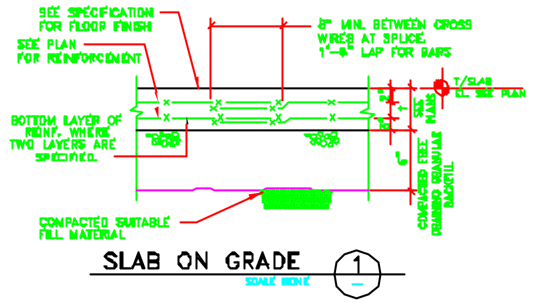

SLAB ON GRADE (1)
SCALE NONE

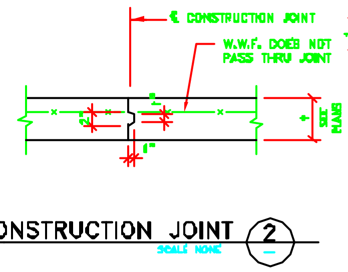

CONSTRUCTION JOINT (2)
SCALE NONE

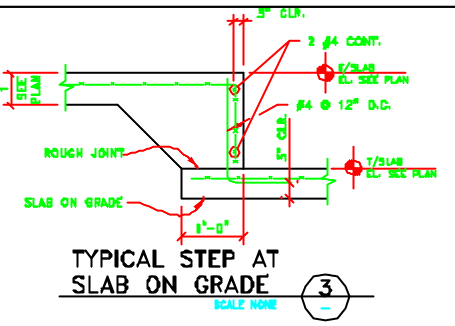

TYPICAL STEP AT SLAB ON GRADE (3)
SCALE NONE

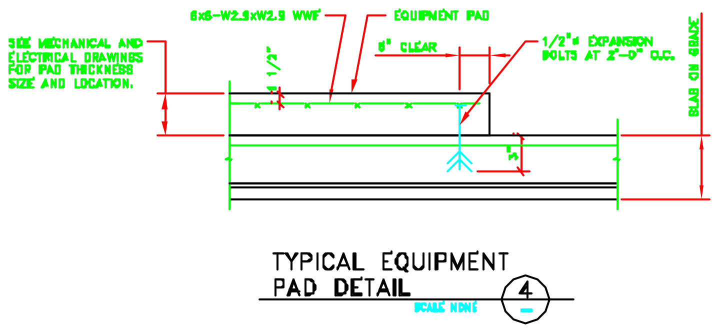

TYPICAL EQUIPMENT PAD DETAIL (4)
SCALE NONE

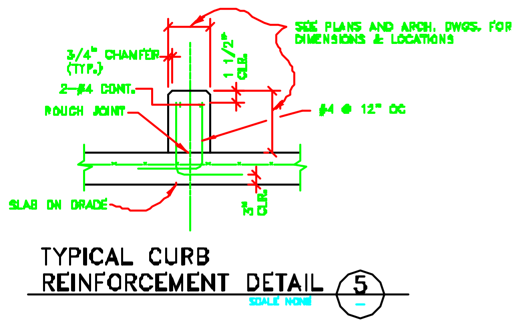

TYPICAL CURB REINFORCEMENT DETAIL (5)
SCALE NONE

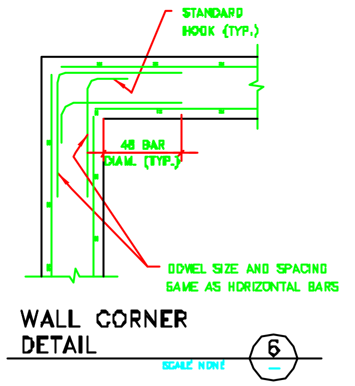

WALL CORNER DETAIL (6)
SCALE NONE

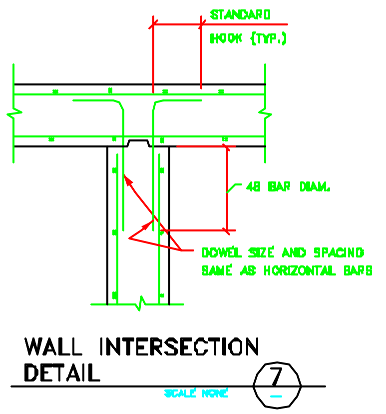

WALL INTERSECTION DETAIL (7)
SCALE NONE

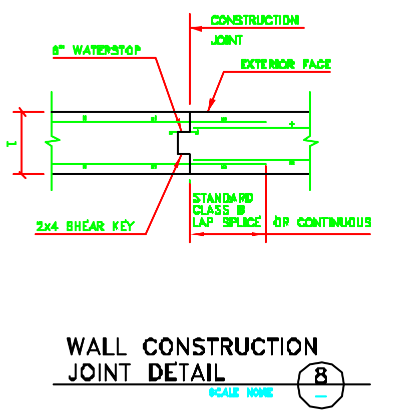

WALL CONSTRUCTION JOINT DETAIL (8)
SCALE NONE

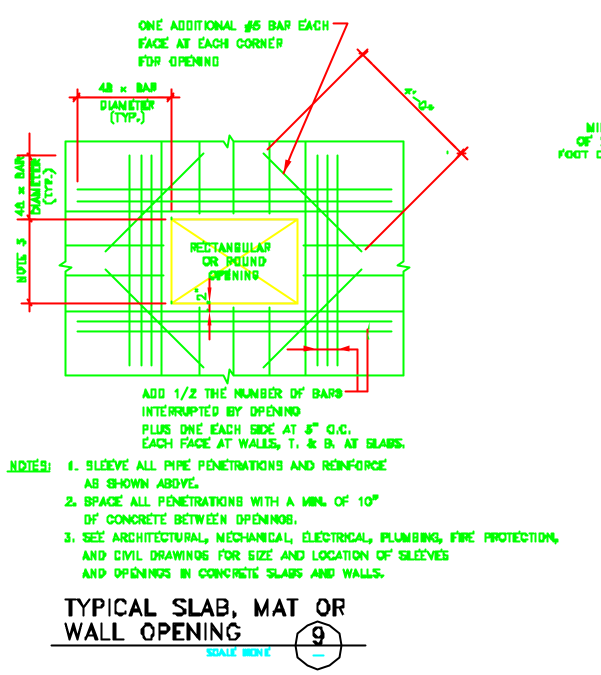

NOTES:
1. SLEEVE ALL PIPE PENETRATIONS AND REINFORCE AS SHOWN ABOVE.
2. SPACE ALL PENETRATIONS WITH A MIN. OF 10" OF CONCRETE BETWEEN OPENINGS.
3. SEE ARCHITECTURAL, MECHANICAL, ELECTRICAL, PLUMBING, FIRE PROTECTION, AND CIVIL DRAWINGS FOR SIZE AND LOCATION OF SLEEVES AND OPENINGS IN CONCRETE SLABS AND WALLS.

TYPICAL SLAB, MAT OR WALL OPENING (9)
SCALE NONE

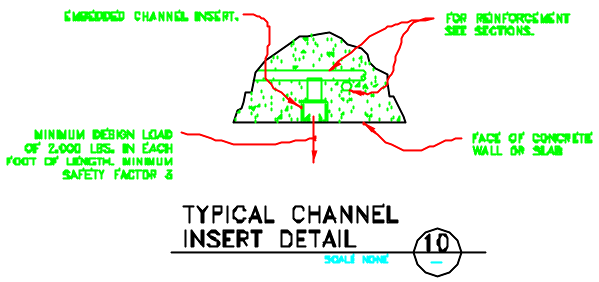

TYPICAL CHANNEL INSERT DETAIL (10)
SCALE NONE

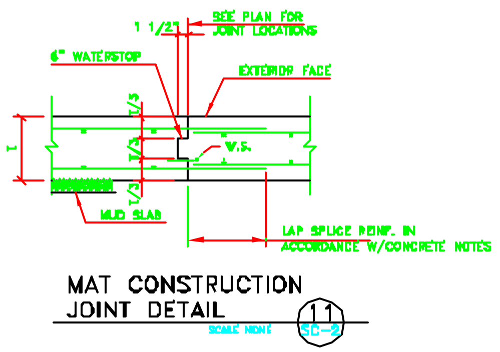

MAT CONSTRUCTION JOINT DETAIL (11 / SC-2)
SCALE NONE

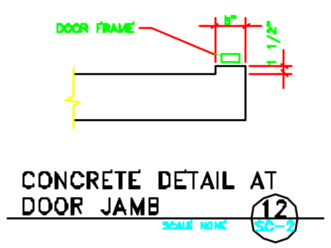

CONCRETE DETAIL AT DOOR JAMB (12 / SC-2)
SCALE NONE

# GENERAL NOTES:

A. GENERAL

1. THE SUBCONTRACTOR SHALL REFER TO CIVIL, ARCHITECTURAL, MECHANICAL, ELECTRICAL, PLUMBING, AND FIRE PROTECTION DRAWINGS, AND COORDINATE ALL WORK BEFORE FABRICATION OF STEEL OR PLACEMENT OF CONCRETE. THE SUBCONTRACTOR SHALL COORDINATE SIZE AND LOCATION OF OPENINGS, BLOCK OUTS, SLEEVES, EMBEDDED PIPE, EQUIPMENT PADS, CURBS, ANCHOR BOLTS, EMBEDDED CHANNEL INSERTS, AND EMBEDDED PLATES AND ANGLES.
2. SEE DRAWING NO. SS-1 FOR ADDITIONAL NOTES.

B. FOUNDATIONS

1. THE ASSUMED MINIMUM NET SOIL BEARING CAPACITY IS 3,000 PSF FOR MATS AND FOUNDATIONS BEARING NEAR ELEVATION 726'-0". THE ASSUMED MINIMUM NET SOIL BEARING CAPACITY IS 1,500 PSF FOR FOOTINGS BEARING NEAR ELEVATION 746'-0". THE ALLOWABLE SOIL BEARING CAPACITIES ARE TO BE VERIFIED IN THE FIELD BY THE GEOTECHNICAL ENGINEER.
2. ALL EXCAVATION FOR STRUCTURES SHALL BE KEPT DEWATERED DURING CONSTRUCTION OPERATIONS UNTIL BACKFILL IS IN PLACE.
3. CENTERLINE OF COLUMN COINCIDES WITH CENTERLINE OF FOOTING, UNLESS OTHERWISE SHOWN OR NOTED.
4. SEE SPECIFICATIONS AND CIVIL DRAWINGS FOR EXCAVATION AND BACKFILL REQUIREMENTS.

C. CONCRETE

1. CONCRETE SHALL BE NORMAL WEIGHT WITH A MINIMUM SPECIFIED COMPRESSIVE STRENGTH (F'C) OF 4000 PSI AT 28 DAYS.
2. REINFORCING STEEL SHALL COMPLY WITH ASTM A 615 GRADE 60. REINFORCING STEEL TO BE WELDED SHALL CONFORM TO ASTM A 706 GRADE 60.
3. WELDED WIRE FABRIC SHALL COMPLY WITH ASTM A 185.
4. PROVIDE CONCRETE REINFORCING STEEL INSTITUTE (CRSI) CLASS B, CATEGORY 5 LAP SPLICES AT ALL LOCATIONS WHERE REINFORCEMENT IS SPLICED UNLESS OTHERWISE NOTED. BAR HOOKS SHALL BE STANDARD UNLESS OTHERWISE NOTED.
5. CONSTRUCTION JOINTS IN WALLS SHALL NOT BE FURTHER APART THAN SIXTY FEET ON CENTER.
6. WATERSTOPS SHALL BE PROVIDED AT ALL CONSTRUCTION JOINTS BELOW GRADE, INCLUDING CONSTRUCTION JOINTS NOT SHOWN ON THE DRAWINGS.
7. ALL EXPOSED EDGES OF BEAMS, COLUMNS, SLABS, AND WALLS SHALL BE CHAMFERED 3/4" UNLESS OTHERWISE NOTED.
8. ALL HORIZONTAL SURFACES WHICH ARE TO RECEIVE DAMPPROOFING SHALL BE STEEL TROWELLED.
9. THE SUBCONTRACTOR SHALL REFER TO CIVIL, ARCHITECTURAL, MECHANICAL, ELECTRICAL, PLUMBING AND FIRE PROTECTION DRAWINGS FOR ADDITIONAL CONCRETE WORK NOT SHOWN ON THE STRUCTURAL DRAWINGS.

D. DESIGN CRITERIA

1. LATERAL DESIGN LOADS

WIND

| | |
|---|---|
| BASIC WIND SPEED: | 76 MPH |
| EXPOSURE CATEGORY: | EXPOSURE C |
| IMPORTANCE FACTOR: | 1.0 |

THE ABOVE LISTED PARAMETERS ARE UTILIZED IN ACCORDANCE WITH THE PROVISIONS OF ASCE 7-88, SECTION 6.

2. VERTICAL DESIGN LOADS AT FOUNDATION PLAN LEVEL

EXPERIMENTAL HALL (FOUNDATION PLAN LEVEL WEST OF COLUMN LINE C)

| | |
|---|---|
| LIVE LOAD | 1000 PSF (MINIMUM) |
| EQUIPMENT | 4000 PSF UNIFORM LOAD, 15 FEET WIDE, CENTERED ABOUT THE BEAM LINE. |
| MAXIMUM POINT LOAD | 200 KIPS OVER 1'-6" x1'-6" AREA |

DECAY AREA ENCLOSURE

| | |
|---|---|
| LIVE LOAD (INCLUDES EQUIPMENT) | 5000 PSF |
| MAXIMUM POINT LOAD | 150 KIPS OVER 1'-6" x1'-6" AREA |

NM3A ENCLOSURE

| | |
|---|---|
| LIVE LOAD | 250 PSF (MINIMUM) |
| EQUIPMENT | 4000 PSF UNIFORM LOAD, 6.5 FEET WIDE. CENTERED ABOUT THE BEAM LINE. |
| MAXIMUM POINT LOAD | 80 KIPS OVER 1'-6" x1'-6" AREA |

3. VERTICAL DESIGN LOADS AT GRADE LEVEL

UPPER EXPERIMENTAL HALL (GRADE LEVEL WEST OF COLUMN LINE C)

| | |
|---|---|
| WEIGHT OF SHIELDING BLOCKS (CONCRETE, 6 FEET THICK) | 900 PSF |
| WEIGHT OF STACKED SHIELDING BLOCKS (STACKED CONCRETE, 6 FEET THICK) (ADDITIONAL TO SHIELDING BLOCKS) | 900 PSF |
| SHIELDING BLOCKS | SHIELDING BLOCKS ARE NOT DESIGNED TO SUPPORT LIVE LOAD OTHER THAN STACKED SHIELDING BLOCKS |
| LOADING DOCK | 900 PSF |
| CATWALK | 100 PSF |
| STAIRS | 100 PSF |

COUNTING HOUSE (SLAB-ON-GRADE) (EAST OF COLUMN LINE D)

| | |
|---|---|
| LIVE LOAD | 250 PSF |

4. VERTICAL DESIGN LOADS AT ROOF LEVEL

EXPERIMENTAL HALL ROOF (WEST OF COLUMN LINE C)

| | |
|---|---|
| DEAD LOAD | 15 PSF |
| HANGING LOAD (MECHANICAL, ELECTRICAL, PLUMBING) | 10 PSF |
| SNOW LOAD | 25 PSF |

COUNTING HOUSE ROOF (EAST OF COLUMN LINE D)

| | |
|---|---|
| DEAD LOAD | 15 PSF |
| HANGING LOAD (MECHANICAL, ELECTRICAL, PLUMBING) | 10 PSF |
| SNOW LOAD | 25 PSF |

5. 25 TON OVERHEAD CRANE WHEEL LOADING

36 KIPS W/O IMPACT — 12'-6" — 36 KIPS W/O IMPACT

# ABBREVIATIONS:

STRUCTURAL ABBREVIATIONS

| | | | |
|---|---|---|---|
| ADDL | ADDITIONAL | MAX | MAXIMUM |
| ARCH | ARCHITECT | MFR | MANUFACTURER |
| B/ | BOTTOM OF | MIN | MINIMUM |
| B | BALANCE | MISC | MISCELLANEOUS |
| ℄ | CENTERLINE | NIC | NOT IN CONTRACT |
| CCD | CHICAGO CITY DATUM | NO. # | NUMBER |
| CJ | CONTROL JOINT | NTS | NOT TO SCALE |
| CLR | CLEAR/CLEARANCE | OC | ON CENTER |
| CMU | CONCRETE MASONRY UNIT | OD | OUTSIDE DIAMETER |
| CONST JT | CONSTRUCTION JOINT | OPP | OPPOSITE |
| CONT | CONTINUED/CONTINUOUS | PCF | POUNDS PER CUBIC FOOT |
| DET | DETAIL | PJF | PREFORMED JOINT FILLER |
| DIA | DIAMETER | ℙ | PLATE |
| DO | DITTO | PLF | POUNDS PER LINEAR FOOT |
| DWG | DRAWING | PSF | POUNDS PER SQUARE FOOT |
| EL | ELEVATION | QTY | QUANTITY |
| EQ | EQUAL | R | RADIUS |
| EXIST (E) | EXISTING | REINF | REINFORCE, (D), (MENT) |
| EXP JT | EXPANSION JOINT | REQD | REQUIRED |
| FD | FLOOR DRAIN | SCHED | SCHEDULE |
| FDN | FOUNDATION | SECT | SECTION |
| FT | FOOT/FEET | SHT | SHEET |
| FTG | FOOTING | SIM | SIMILAR |
| GA | GAGE/GAUGE | SPEC | SPECIFICATION |
| HORIZ | HORIZONTAL | SQ | SQUARE |
| HP | HIGH POINT | STL | STEEL |
| ID | INSIDE DIAMETER | SYM | SYMMETRICAL |
| IN | INCH/INCHES | T | TREAD (S) |
| JT | JOINT | T/ | TOP OF |
| K | KIP | T&B | TOP AND BOTTOM |
| KSF | KIPS PER SQ FT | THRU | THROUGH |
| KSI | KIPS PER SQ IN | TYP | TYPICAL |
| LB | POUND | UON | UNLESS OTHERWISE NOTED |
| LF | LINEAR FOOT | VERT | VERTICAL |
| LLH | LONG LEG HORIZONTAL | W/ | WITH |
| LLV | LONG LEG VERTICAL | W/O | WITHOUT |
| LP | LOW POINT | WS | WATERSTOP |
| | | WWF | WELDED WIRE FABRIC |
| | | WP | WORK POINT |

| No. | Date | Drawing Issue Description | By |
|---|---|---|---|
| | | | |

KNIGHT
Knight Architects Engineers Planners, Inc.
549 West Randolph Street
Chicago, IL 60661

| | NAME | DATE |
|---|---|---|
| DISCIPLINE REVIEW | T. LACKOWSKI | 1/28/94 |
| DIVISION REVIEW | J. TITUS / S. DIXON | 1/28/94 |
| LAP APPROVAL | E. CRUMPLEY | 1/28/94 |
| PROJ APPROVAL | W. NESTANDER | 1/28/94 |
| DRAWN BY | G. BOCK | 1/28/94 |

SCALE:

FERMI NATIONAL ACCELERATOR LABORATORY
UNITED STATES DEPARTMENT OF ENERGY

KTeV EXPERIMENTAL AREA
CONCRETE DETAILS & NOTES

DRAWING NO. 8-6-3 SC-1 REV.

28 JAN. 1994

Date&Time: 01/25/94 13:15:44 User: BKS Filename: P:\ISEND-TO\FNL\KSPSSC-1