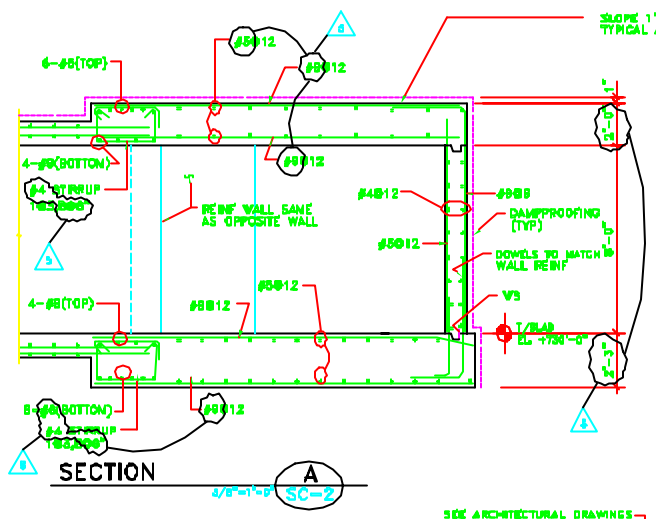

SECTION A 3/8"=1'-0" SC-2

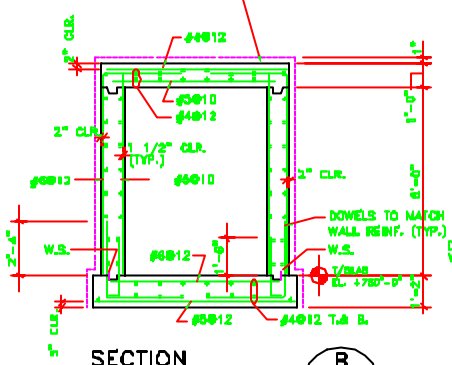

SECTION B 3/8"=1'-0" SC-2

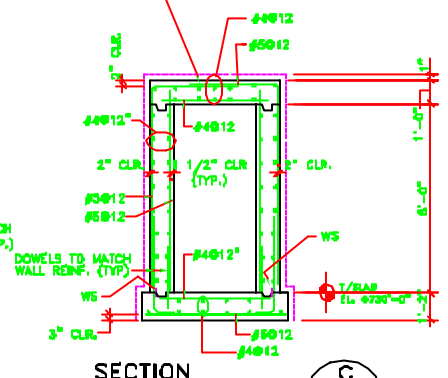

SECTION C 3/8"=1'-0" SC-2

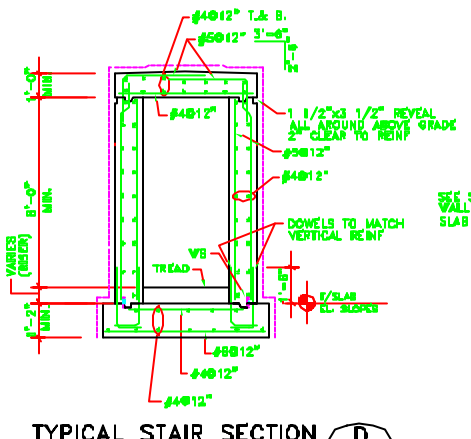

TYPICAL STAIR SECTION D 3/8"=1'-0" SC-2

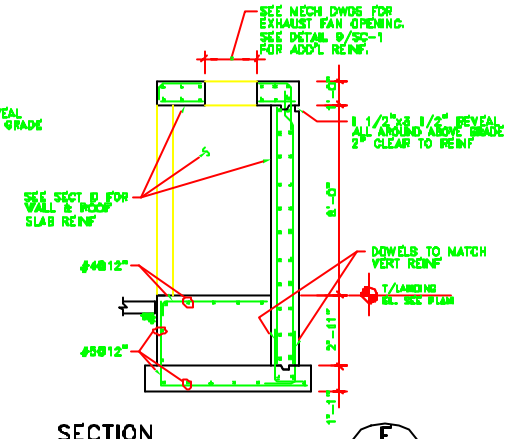

SECTION E 3/8"=1'-0" SC-2

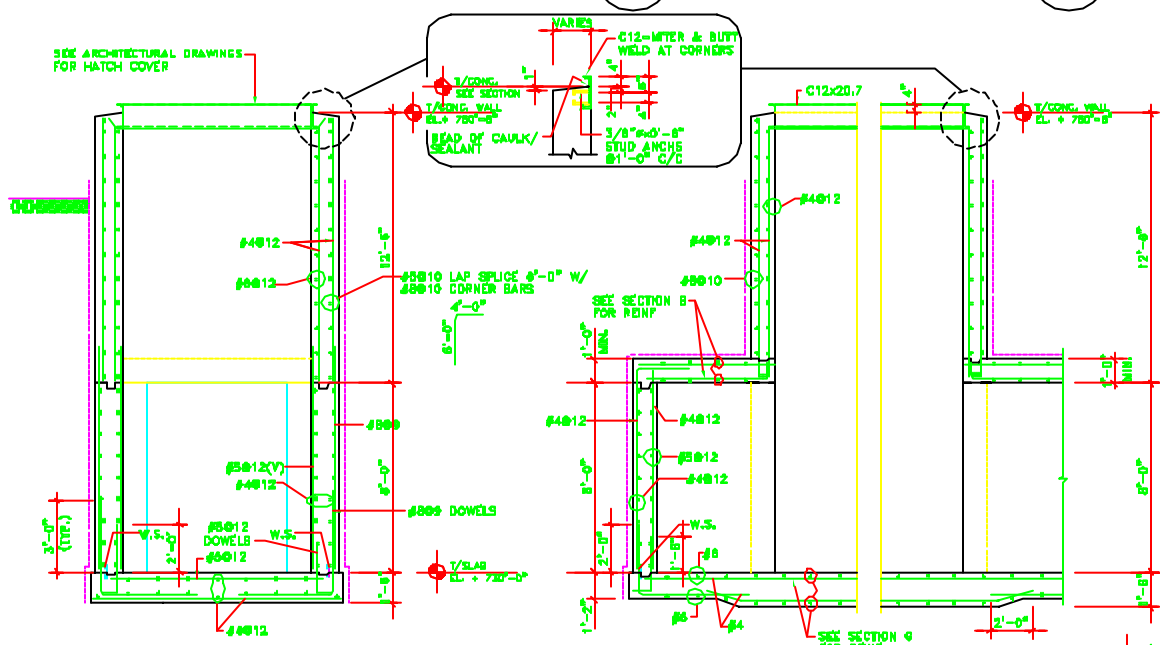

SECTION @ EQUIPMENT HATCH G 3/8"=1'-0" SC-2

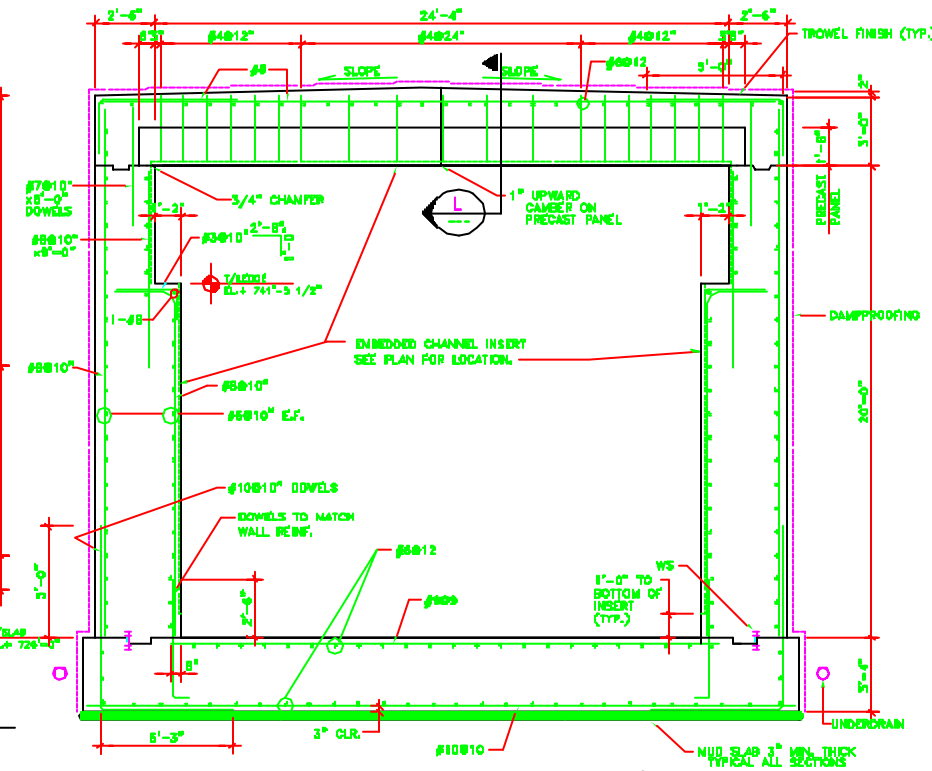

SECTION @ EQUIPMENT HATCH H 3/8"=1'-0" SC-2

SECTION AT DECAY AREA J 3/8"=1'-0" SC-2

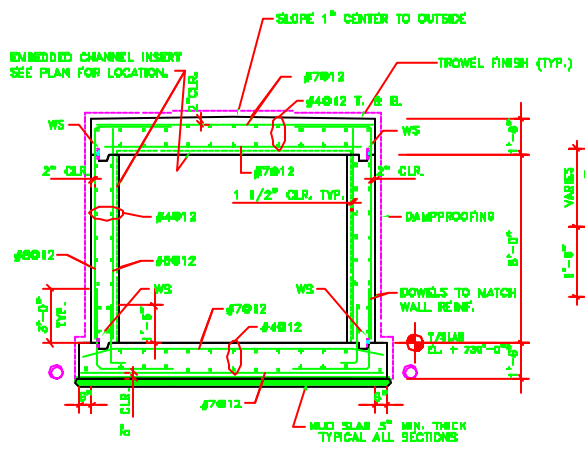

SECTION @ NM3a K 3/8"=1'-0" SC-2

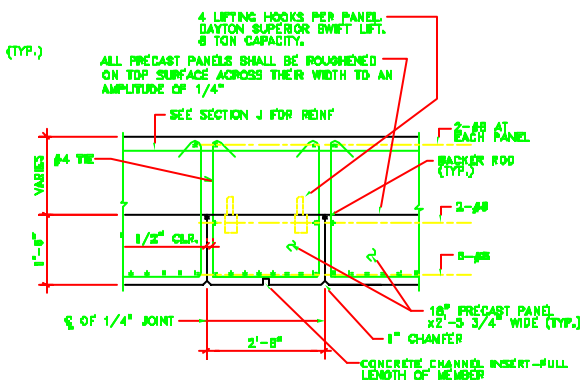

SECTION L 3/8"=1'-0" SC-2

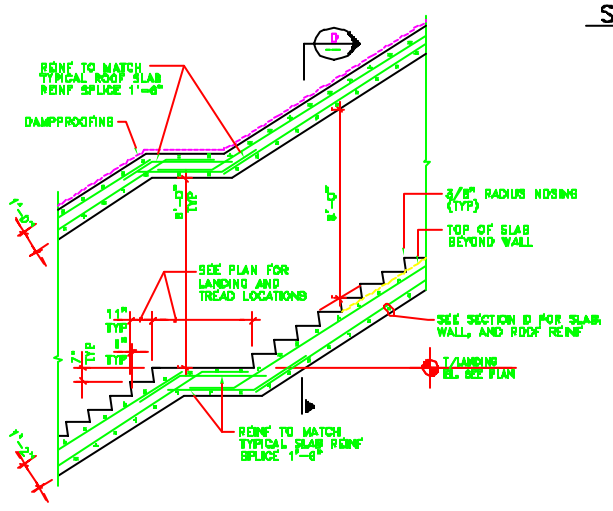

TYPICAL STAIR SECTION M 3/8"=1'-0" SC-2

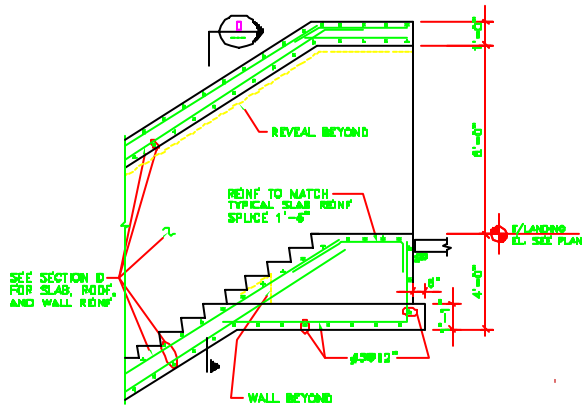

TYPICAL STAIR SECTION N 3/8"=1'-0" SC-2

No.	Date	Drawing Issue Description	By
3	3/30/94	REVISE CONCRETE DIMENSIONS/REINF.	

KNIGHT
Knight Architects Engineers Planners, Inc.
540 West Randolph Street
Chicago IL 60661

	NAME	DATE
DISCIPLINE REVIEW	T. LACKOWSKI	1/28/94
CRITERIA REVIEW	J. TITUS S. DIXON	1/28/94
CSP APPROVAL	E. CRUMPLEY	1/28/94
FESS APPROVAL	W. NESTANDER	1/28/94
SUBMITTED	C. BOCK	1/28/94

SCALE:
3/8"=1'-0" SCALE 0 1 2 3 4 5 6 7 FEET
3/4"=1'-0" SCALE 0 1 2 3 4 FEET

FERMI NATIONAL ACCELERATOR LABORATORY
UNITED STATES DEPARTMENT OF ENERGY

KTeV EXPERIMENTAL AREA
CONCRETE SECTIONS - SHT. 3

DRAWING NO. 8-6-3 SC-6 REV. 5

SIZE 24X36 DR