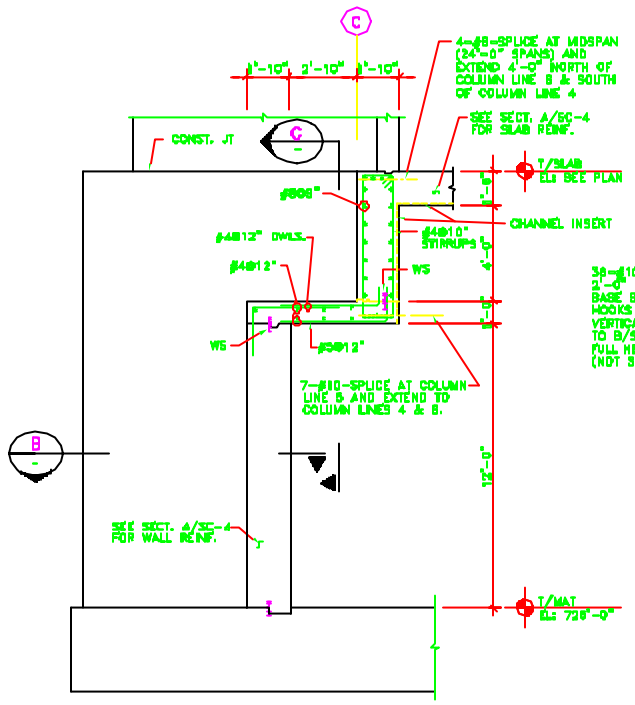

SECTION A SC-2

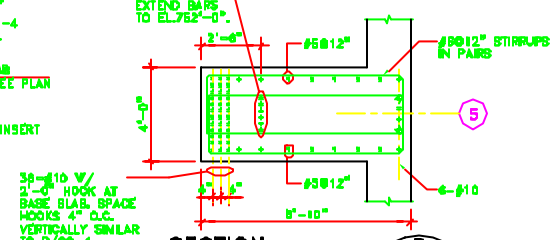

SECTION B 3/8"=1'-0"

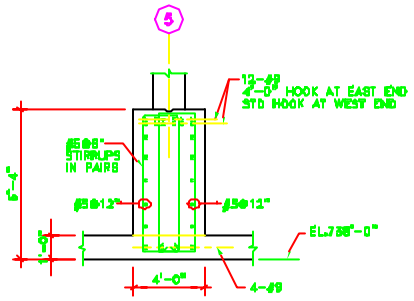

SECTION C 3/8"=1'-0"

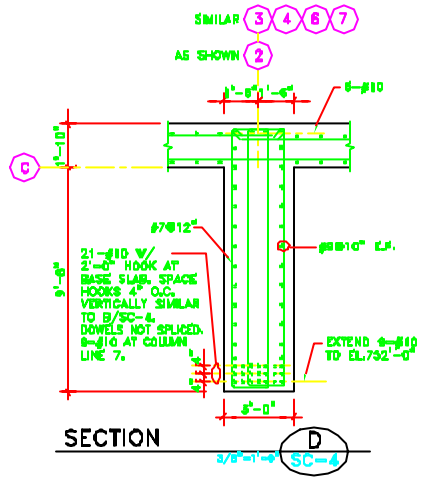

SECTION D 3/8"=1'-0" SC-4

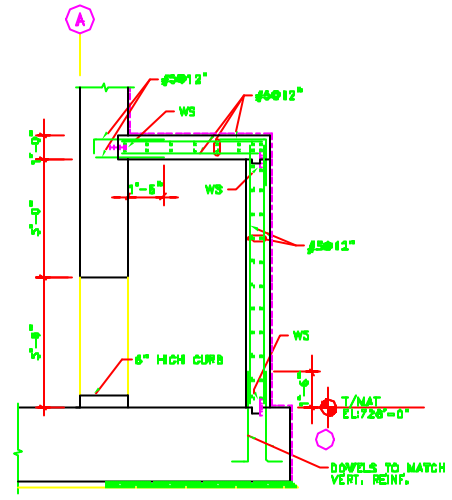

SECTION AT DUCT VAULT J 3/8"=1'-0" SC-2

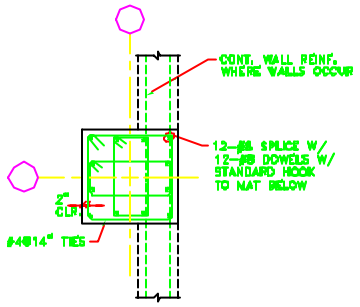

36"x36" COLUMN E 1/2"=1'-0" SC-2

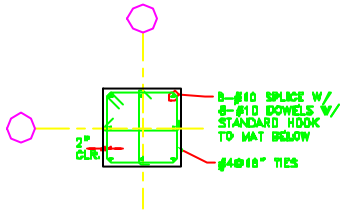

30"x30" COLUMN F 1/2"=1'-0" SC-2

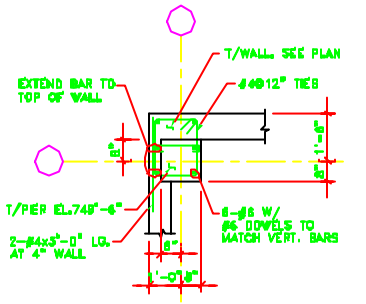

PIER P1 G 1/2"=1'-0" SC-3

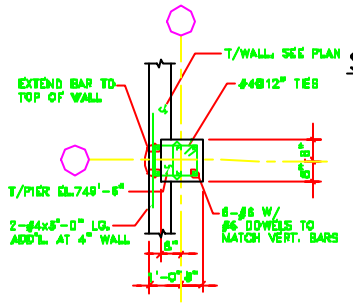

PIER P2 H 1/2"=1'-0" SC-3

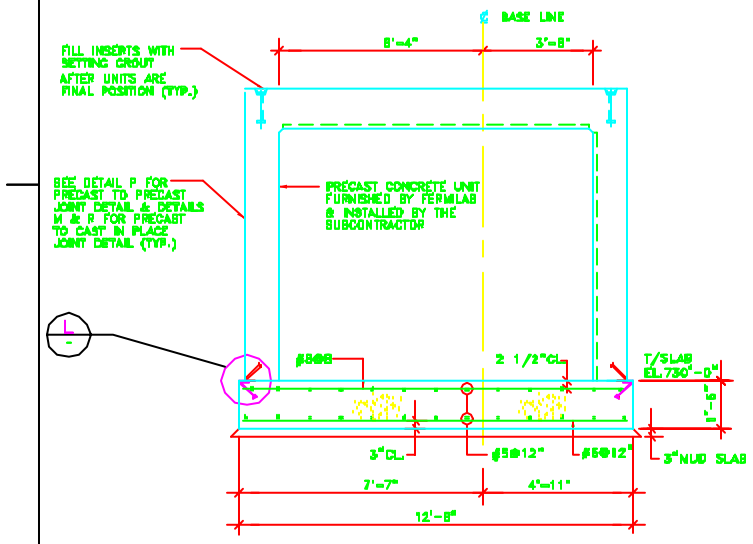

SECTION K 1/2"=1'-0" SC-2

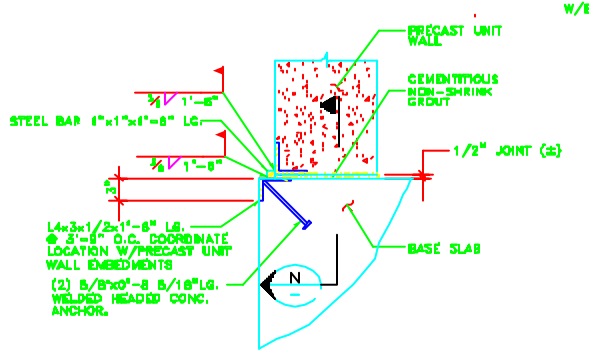

DETAIL L 1 1/2"=1'-0"

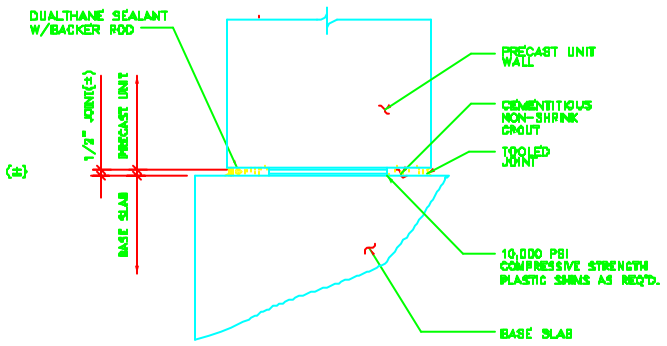

DETAIL M 6"=1'-0"

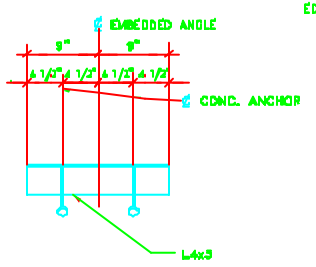

SECTION N 1 1/2"=1'-0"

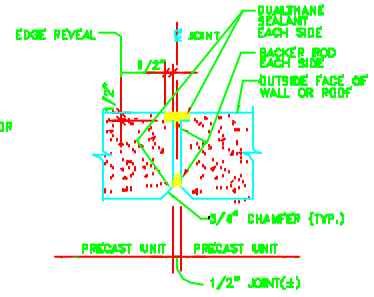

DETAIL P N.T.S.

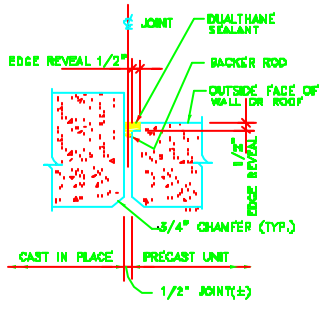

NOTE: WHEN PLACING CAST-IN PLACE CONCRETE AGAINST A PRECAST UNIT ALREADY IN PLACE, PROVIDE 1/2" THICK EXPANSION JOINT MATERIAL BETWEEN CAST-IN PLACE CONST. & THE PRECAST UNIT.

DETAIL R N.T.S.

No.	Date	Revision Issue Description	By

KNIGHT

Knight Architects Engineers Planners, Inc.
540 West Randolph Street
Chicago, IL 60661

	NAME	DATE
DISCIPLINE REVIEW	T. LACKOWSKI	1/28/94
CRITERIA REVIEW	A. TITUS S. DIXON	1/28/94
CSBP APPROVAL	E. CRUMPLEY	1/28/94
FCM APPROVAL	W. NESTANDER	1/28/94
SUBMITTED	C. BOCK	1/28/94

SCALE:
3/8"=1'-0" FULL SCALE 0 1 2 3 4 5 6 7 FOOT
1/2"=1'-0" HALF SCALE 0 1 2 3 4 5 6 FEET

FERMI NATIONAL ACCELERATOR LABORATORY
UNITED STATES DEPARTMENT OF ENERGY

KTeV EXPERIMENTAL AREA
CONCRETE SECTIONS - SHT. 4

DRAWING NO. 8-6-3 SC-7 REV.

28 JAN. 1994

DateTime 01/28/94 13:41:23 User BIS Elementset EN\SEND-TO\TN\KSPSC-7