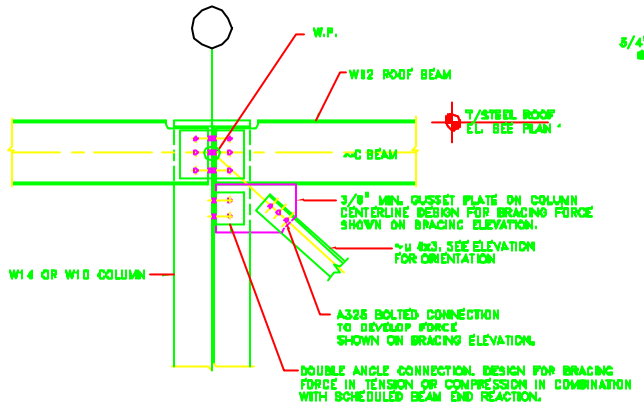

DETAIL 1 SS-3
SCALE: 1"=1'-0"

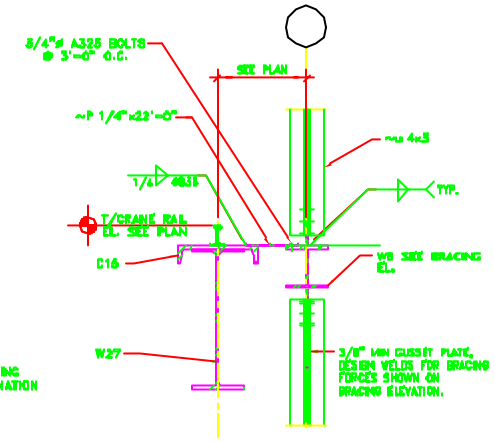

SECTION 2 SS-3 SS-1
SCALE: 1"=1'-0"

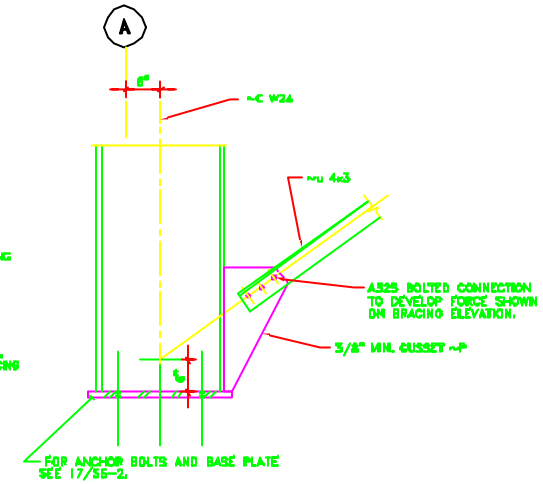

DETAIL 3 SS-3
SCALE: 1"=1'-0"

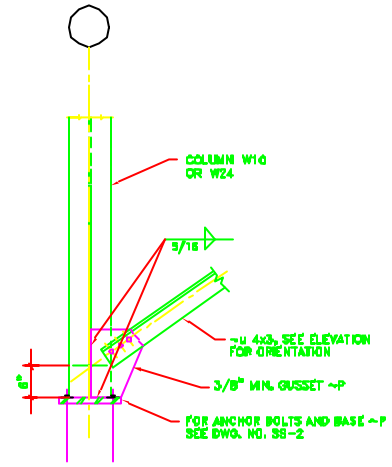

DETAIL 4 SS-3
SCALE: 1"=1'-0"

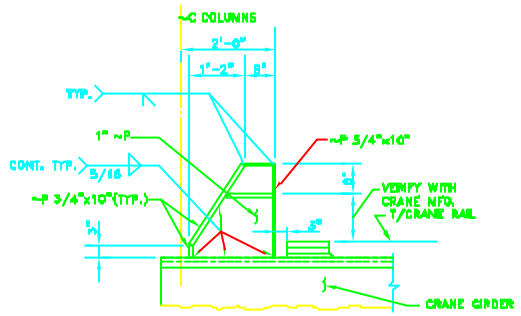

CRANE STOP DETAIL 5 SS-1
SCALE: 3/4"=1'-0"

NOTE:
ALL CRANE RAILS TO HAVE BOLTED SPLICES. RAIL ENDS SHALL BE MILLED AND ALL JOINTS SHALL BE TIGHT.

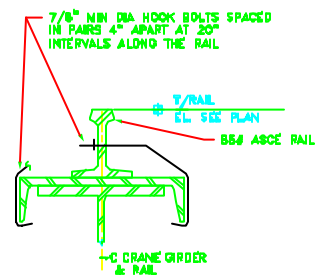

SECTION 6 SS-2
SCALE: NONE

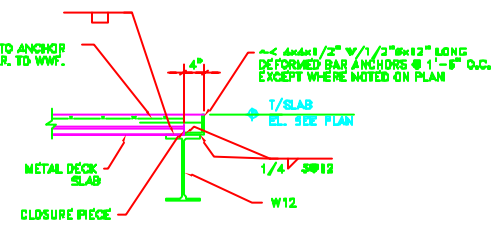

TYPICAL SLAB EDGE DETAIL 7 SS-1
SCALE: 1"=1'-0"

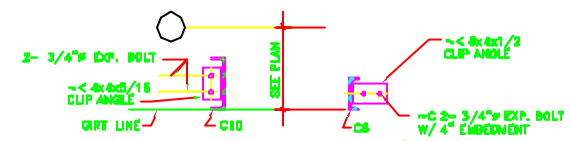

DETAIL 8 SS-3
SCALE: 1"=1'-0"

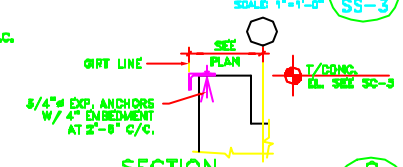

SECTION 9 SS-3
SCALE: 1"=1'-0"

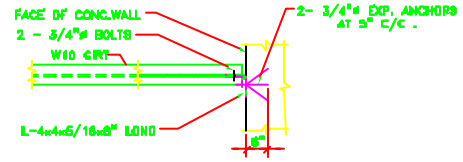

DETAIL 10 SS-3
SCALE: 1"=1'-0"

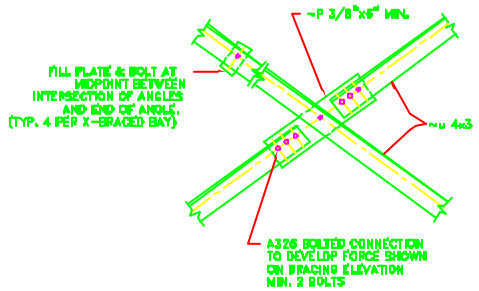

SECTION 11 SS-3
SCALE: 1"=1'-0"

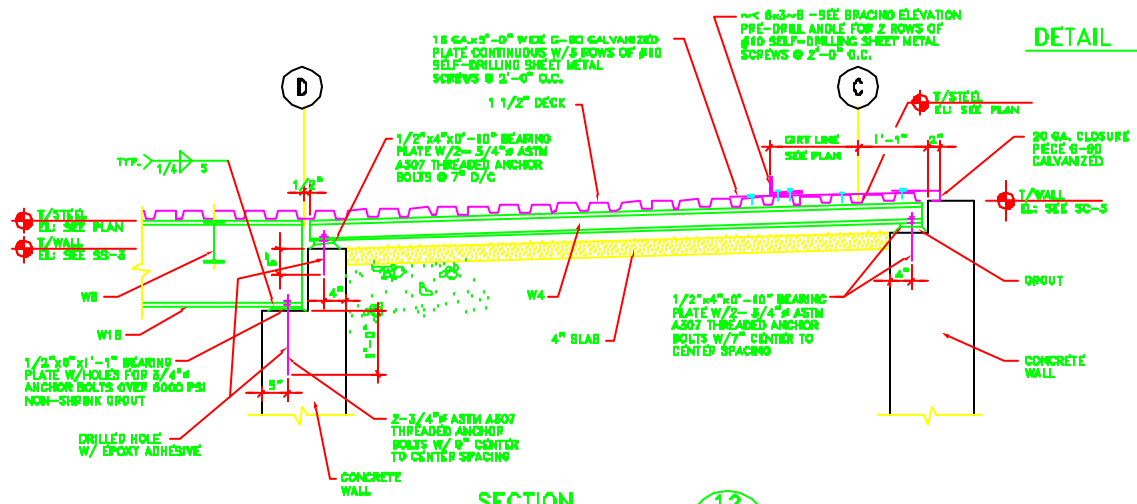

SECTION 12 SS-1
SCALE: 1"=1'-0"

No.	Date	Revision Description	By

KNIGHT
Knight Architects Engineers Planners, Inc.
140 West Reynolds Street
Dekalb, IL 60115
FORMERLY SGF
Knight and SGF Limited Liability Partnership

	NAME	DATE
DISCIPLINE REVIEW	T. LACKOWSKI	1/28/94
CRITERIA REVIEW	J. TITUS S. DIXON	1/28/94
ES&H APPROVAL	E. CRUMPLEY	1/28/94
FERMI APPROVAL	W. NESTANDER	1/28/94
SUBMITTED	G. BOCK	1/28/94

SCALES
3/4"=1'-0" SCALE 1 0 1 2 3 4 FEET
1"=1'-0" SCALE 1 0 1 2 3 4 FEET

FERMI NATIONAL ACCELERATOR LABORATORY
UNITED STATES DEPARTMENT OF ENERGY

KTeV EXPERIMENTAL AREA
STEEL DETAILS - SHT. 2

DRAWING NO. 8-6-3 SS-4 REV.

JAN. 1994

Date/Time: 01/28/94 10:02:04 User: GKS Filename: DV1SEND-TOAFIL\SSFSS3-4