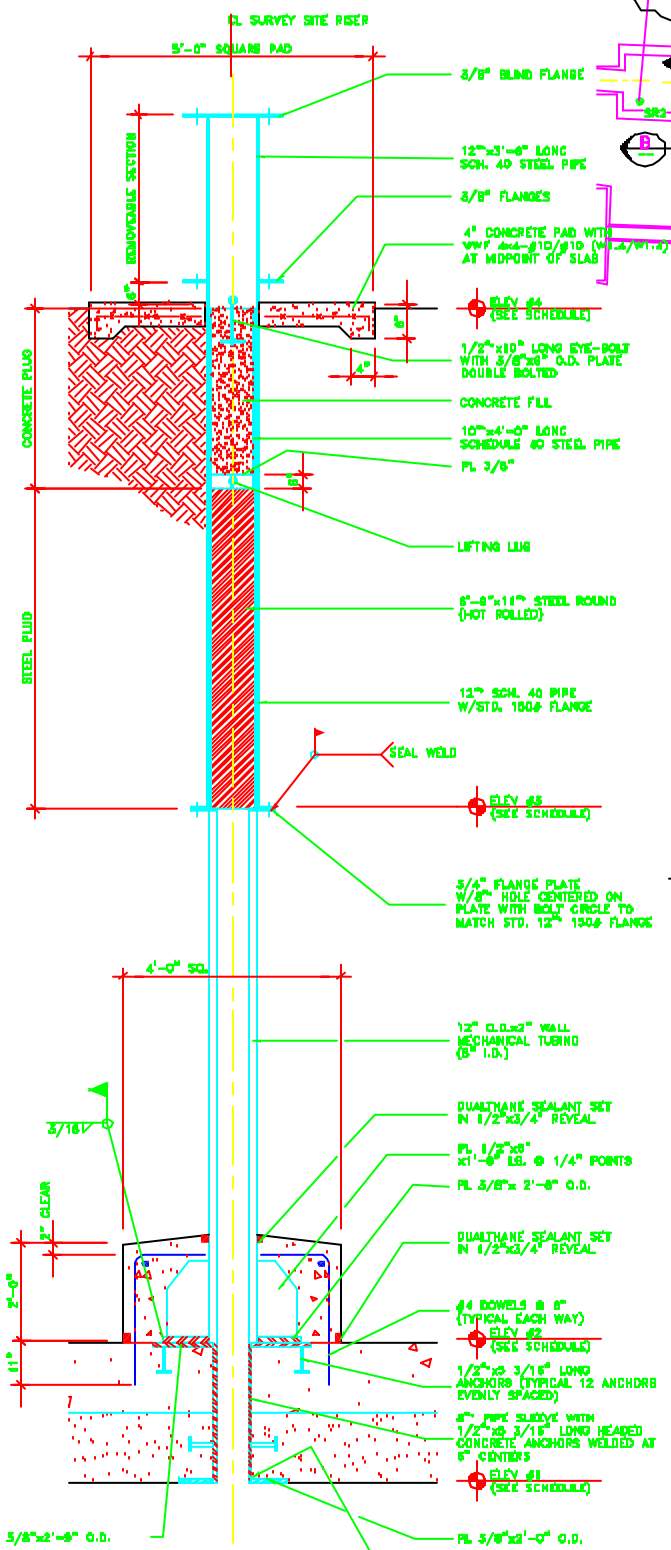

SECTION A
3/4"=1'-0"

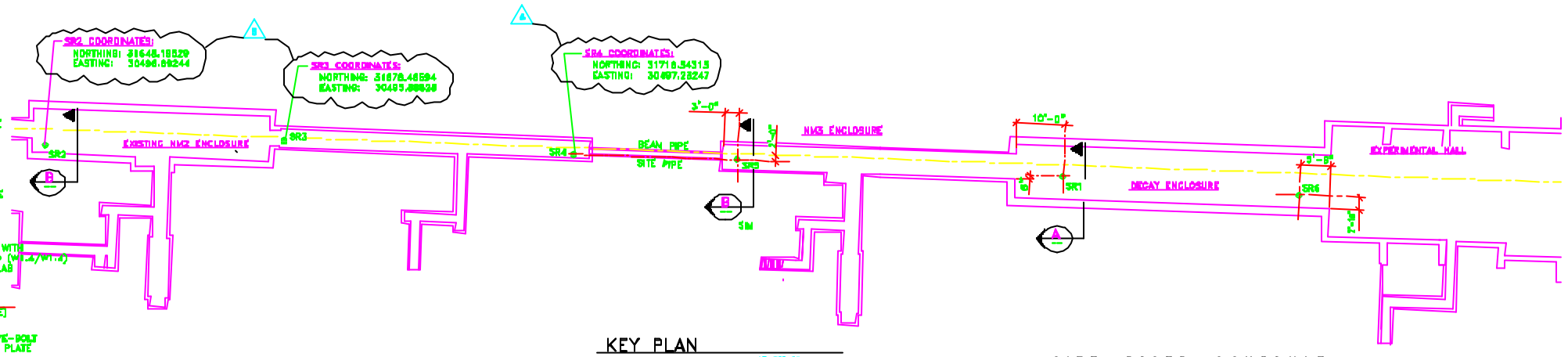

KEY PLAN

1"=20'-0"

NOTE:
THE LOCATIONS OF THE SURVEY SITE RISERS INDICATED ON THE KEY PLAN SHALL BE VERIFIED WITH FERMILAB CONSTRUCTION COORDINATOR PRIOR TO INSTALLATION. SET SURVEY SITE RISERS TRUE AND PLUMB IN ACCORDANCE WITH THE TOLERANCES DESCRIBED IN THE SPECIFICATIONS. SUBCONTRACTOR SHALL BE RESPONSIBLE FOR THE DESIGN AND INSTALLATION OF A TEMPORARY SUPPORT SYSTEM TO PROVIDE SUPPORT FOR THE SURVEY SITE RISERS DURING BACKFILLING OPERATIONS TO ENSURE THAT THE SURVEY SITE RISER REMAINS STRAIGHT AND PLUMB.

THE POSITION OF SITE RISERS SR2, SR3 AND SR4 SHALL SHALL BE FIELD LOCATED BY FERMILAB. THE SUBCONTRACTOR SHALL NOTIFY THE CONSTRUCTION COORDINATOR 48 HOURS BEFORE THE FERMILAB SURVEY CREW IS REQUIRED.

SITE RISER SCHEDULE

MARK	CONST. TYPE NEW	CONST. TYPE EXIST	ELEV #1 B/ROOF	ELEV #2 T/ROOF	ELEV #3 FLANGE	ELEV #4 T/BERM	NOTES
SR1	●		748'-0"	749'-0"	755'-0"	767'-0"	
SR2		●	748'-0"	749'-1"	752'-0"	763'-0"	
SR3		●	735'-0"	736'-0"	751'-0"	762'-0"	FIELD VERIFY ROOF ELEVATIONS
SR4		●	735'-0"	736'-0"	745'-0"	756'-0"	FIELD VERIFY ROOF ELEVATIONS
SR5	●		735'-0"	736'-0"	745'-0"	756'-0"	RE USE EXIS. SR IN EXI. S. THIS BRG.
SR6	●		748'-0"	749'-0"	755'-0"	767'-0"	

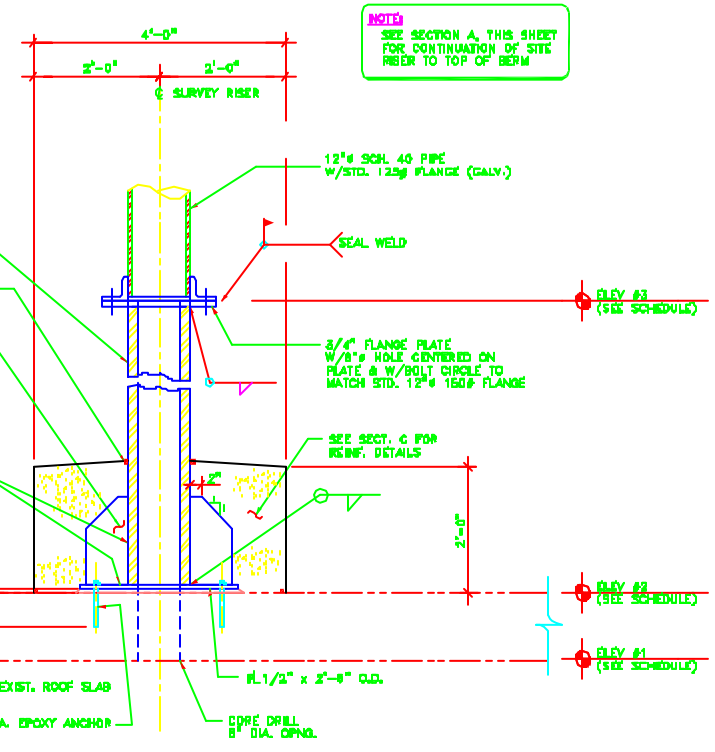

SECTION B
1"=1'-0"

NOTE:
SEE SECTION A, THIS SHEET FOR CONTINUATION OF SITE RISER TO TOP OF BERM

NOTE:
ALL STEEL ELEMENTS BURIED BELOW GRADE SHALL BE COATED WITH A KOPPERS BITUMASTIC 50 PAINT (OR APPROVED EQUAL)

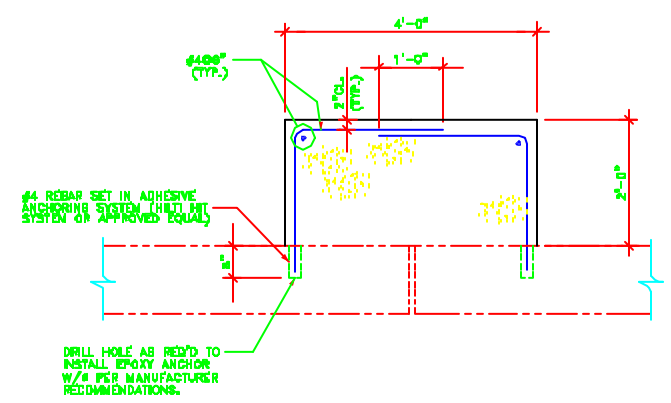

SECTION C
1"=1'-0"

REV.	DATE	DESCRIPTIONS
3	9/30/94	MOVED RISER BRG 2" TO THE WEST
2	7/13/94	ADDED SITE RISERS SR5, SR4, SR6 & SR4

REVISIONS

	NAME	DATE
DISCIPLINE REVIEW	T. LACKOWSKI	1/28/94
CRITERIA REVIEW	A. TITUS B. DIXON	1/28/94
EAP APPROVAL	E. CRUMPLEY	1/28/94
FESS APPROVAL	W. NESTANDER	1/28/94
SUBMITTED	C. BOCK	1/28/94

PROJECT NORTH

SCALE:
1" = 20'-0"
3/4"=1'-0"
1"=1'-0"

FERMI NATIONAL ACCELERATOR LABORATORY
UNITED STATES DEPARTMENT OF ENERGY

KTeV EXPERIMENTAL AREA
SURVEY SITE RISER DETAILS

DRAWING NO. 8-6-3 SC-B REV. 6

30 SEP. 1994