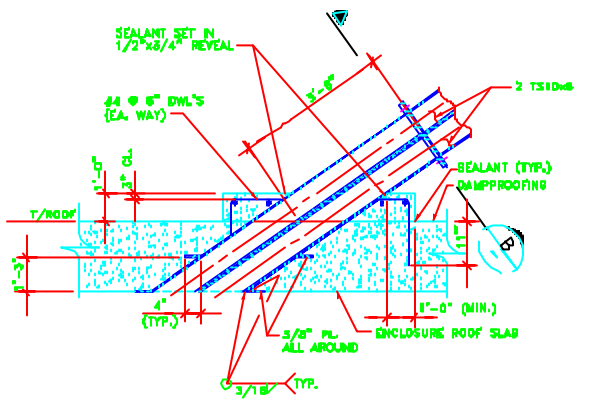

SECTION A
NO SCALE SC-3

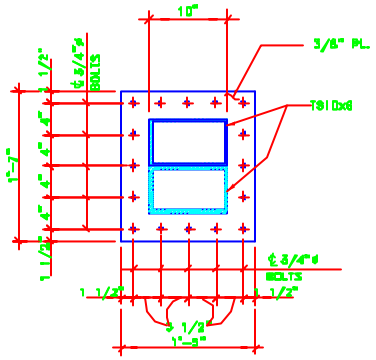

SECTION B
1"=1'-0"

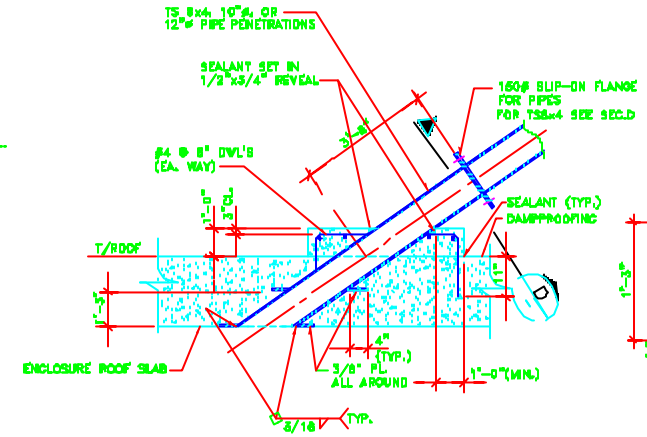

SECTION C
NO SCALE SC-3

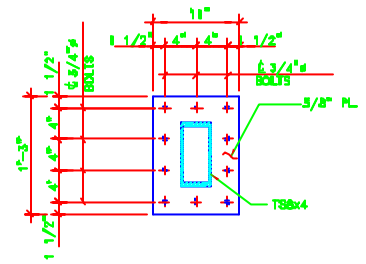

SECTION D
1"=1'-0"

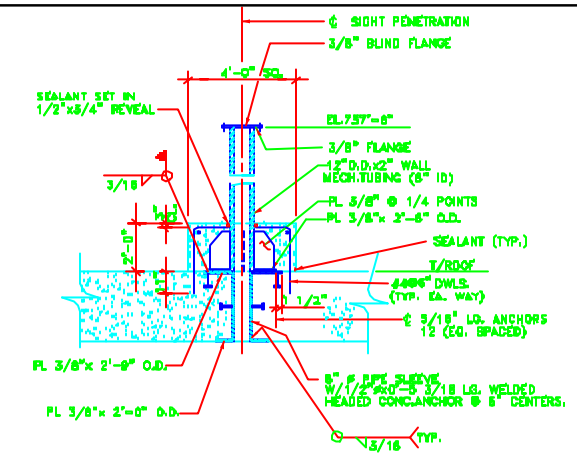

SECTION E
NO SCALE SC-3

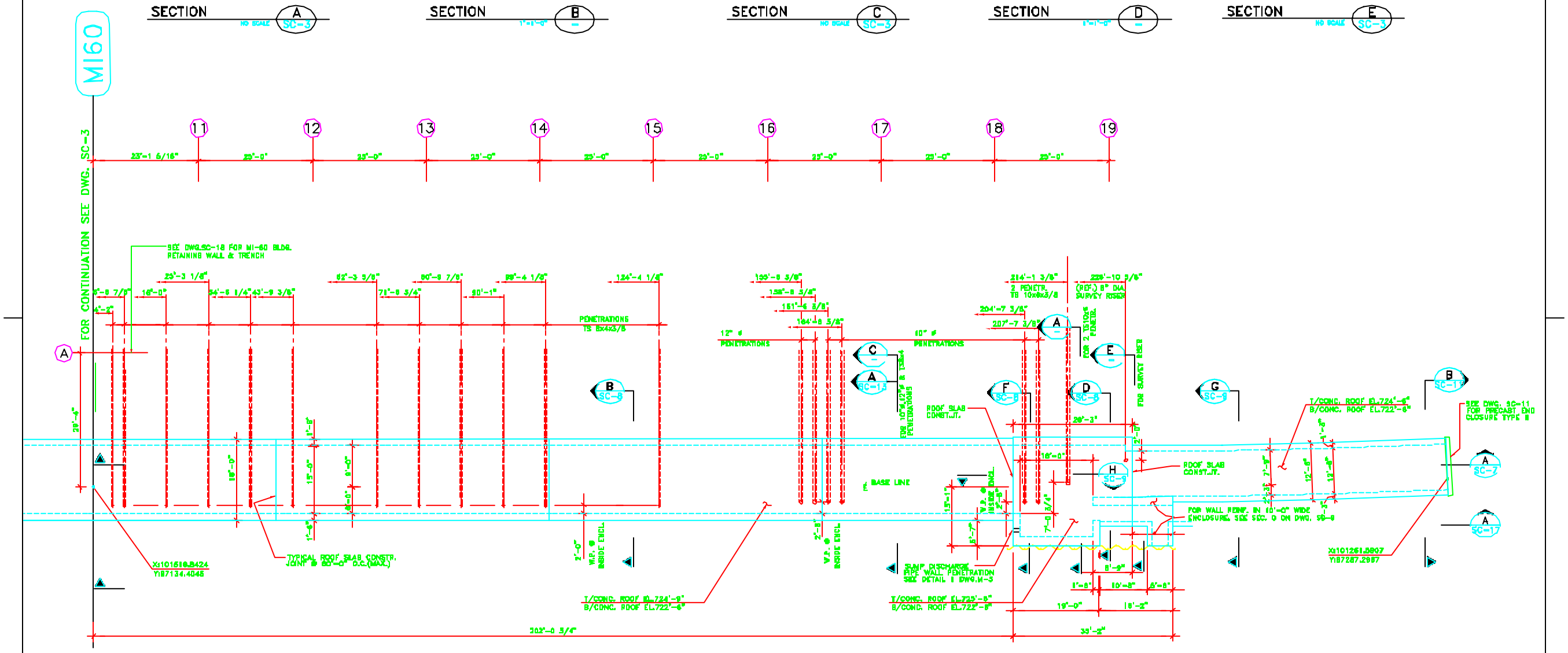

ROOF PLAN – TOP OF CONC. ROOF VARIES
1/8"=1'-0"

NOTES:

1. FOR LIST OF DWG'S, SEE DWG. G-1
2. FOR LEGEND & GENERAL NOTES, SEE DWG. G-2
3. FOR KEY PLAN @ MI-60 ENCLOSURE, SEE DWG. G-3
4. SEE DWG. SC-12 FOR TYPICAL CONCRETE SECTIONS & DETAILS
5. ALL TUBE SECTION (TS) PENETRATION CONDUITS SHALL BE 3/8" THICK GALVANIZED STEEL. ALL 10" AND 12" PIPE PENETRATION CONDUITS SHALL BE SCHEDULE 40 GALVANIZED STEEL. ALL PENETRATION CONDUITS SHALL BE FIELD COATED WITH A BITUMASTIC COATING.

REV.	DATE	DESCRIPTIONS
1	1/26/96	REVISED AS CONSTRUCTED
	1/26/96	POSTER AMENDMENT 1

REVISIONS

FLUOR DANIEL
CHICAGO
PROJECT NO. – Z1842300

	NAME	DATE
DESIGNED	R.JEDZINIAK	11/16/92
DRAWN	R.DELA CRUZ	11/16/92
CHECKED	S.BARAN	11/16/92
APPROVED	R.BRUNTON	11/16/92

	NAME	DATE
CONCEPT		
REVIEWED		
REVIEWED		
APPROVED		
SUBMITTED		

PROJECT NORTH

SCALE:
1/8"=1'-0" SCALE ACTUAL
1"=1'-0" SCALE FEET

FERMI NATIONAL ACCELERATOR LABORATORY
UNITED STATES DEPARTMENT OF ENERGY

MI-60 ENCLOSURE
ROOF PLAN SHEET 2

DRAWING NO. 6-6-4 SC-4 REV. 1

1/26/93