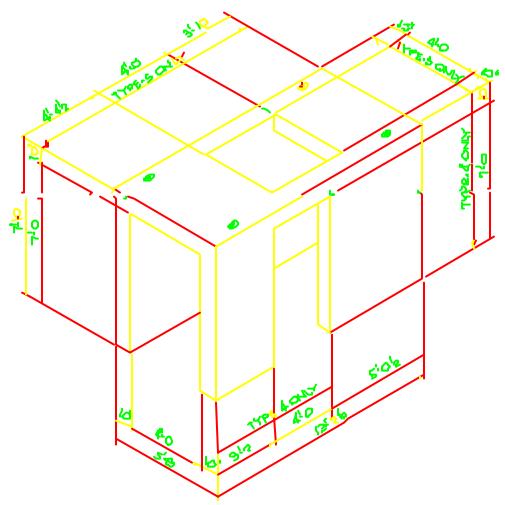

TYPE-3 (AS SHOWN)
TYPE-4 (AS SHOWN/NOTED)
TYPE-5 (AS SHOWN/NOTED)
PRECAST ENCLOSURES

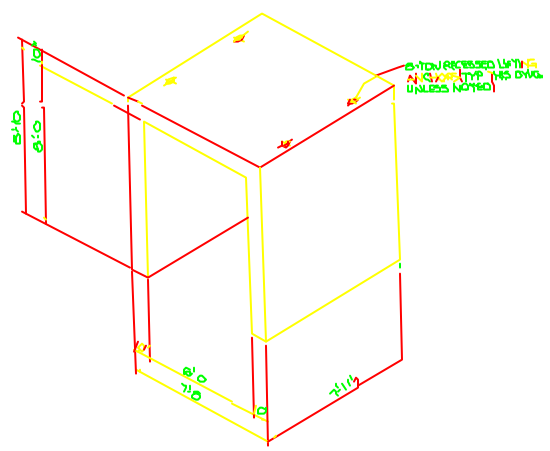

TYPE-1
PRECAST ENCLOSURES

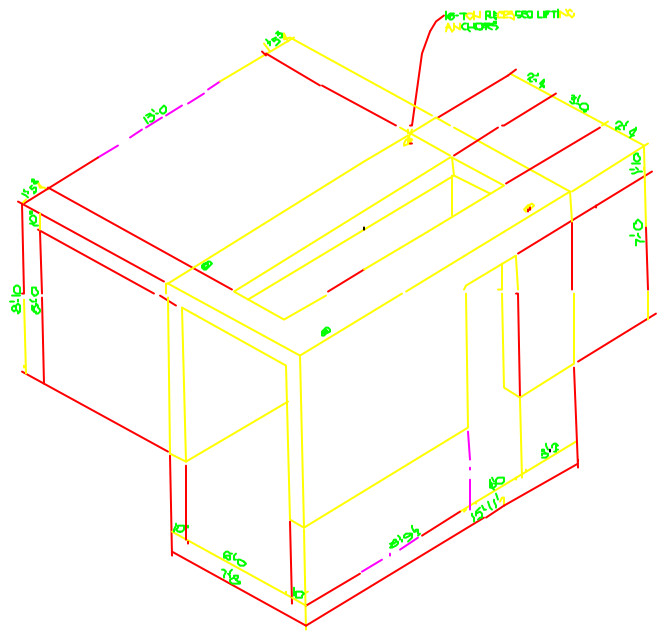

TYPE-2
PRECAST ENCLOSURES

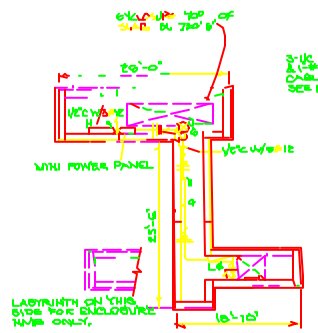

LIGHTING PLAN AT
ENCLOSURE A NM4-NM1
SCALE 1/8" = 1'-0"
PLEASE NOTE TYPICAL FOR 18 ENCLOSURES

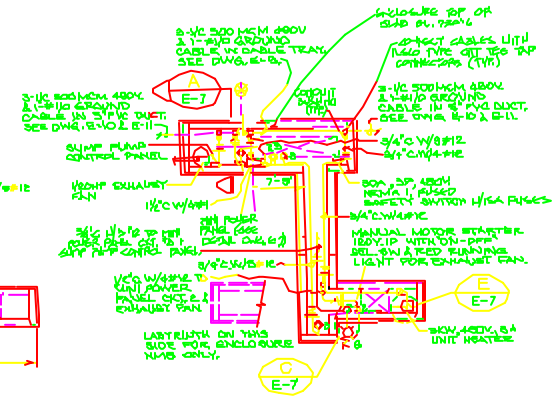

POWER & GROUNDING PLAN AT
ENCLOSURE A NM4-NM1
SCALE 1/8" = 1'-0"
PLEASE NOTE TYPICAL FOR 14 ENCLOSURES

NM4 SALVAGE NOTE:

THE FOLLOWING ITEMS SHALL BE REMOVED AND SALVAGED BY THE SUBCONTRACTOR AND PLACED AS DIRECTED BY THE TERMI CONSTRUCTION COORDINATOR

4-TAD MAGNET AND SUPPORTS
APPROX SIZE 2' WIDE, 3' TALL, 11' LONG

THE APPROX WEIGHT OF THE LARGEST PIECE IS 15 TONS

THIS DRAWING CONTAINS INFORMATION USED IN THE CONSTRUCTION OF THE KNOW BEAM ENCLOSURES AND IS INCLUDED IN THIS SET TO INDICATE THE EXTENTS OF REQUIRED DEMOLITION. A COMPLETE SET OF THE KNOW BEAM ENCLOSURES DOCUMENTS (FERMILAB PROJECT No. 8-2-73) IS AVAILABLE FOR REVIEW DURING THE 1ND PERIOD AS REQUESTED.

REFER TO EXHIBIT A FOR DISPOSAL OF DEMOLITION DEBRIS.

REV	DATE	DESCRIPTION
		REVISIONS

	NAME	DATE
MACHINE DESIGN	T LACKOWSKI	1/28/94
CIVIL DESIGN	J TRUE / S BOOH	1/28/94
ENG APPROVAL	E GRUMPLEY	1/28/94
ITEM APPROVAL	W HESTANDER	1/28/94
SUBMITTED	G BOCK	1/28/94

PROJECT NORTH

SCALE
1/8" = 1'-0"
1/4" = 1'-0"
3/8" = 1'-0"

FERMI NATIONAL ACCELERATOR LABORATORY
UNITED STATES DEPARTMENT OF ENERGY

KTeV EXPERIMENTAL AREA
NM4 ENCLOSURE DETAILS-SHT. 2

DRAWING NO 8-6-3 REF-5 REV

28 JAN 1994